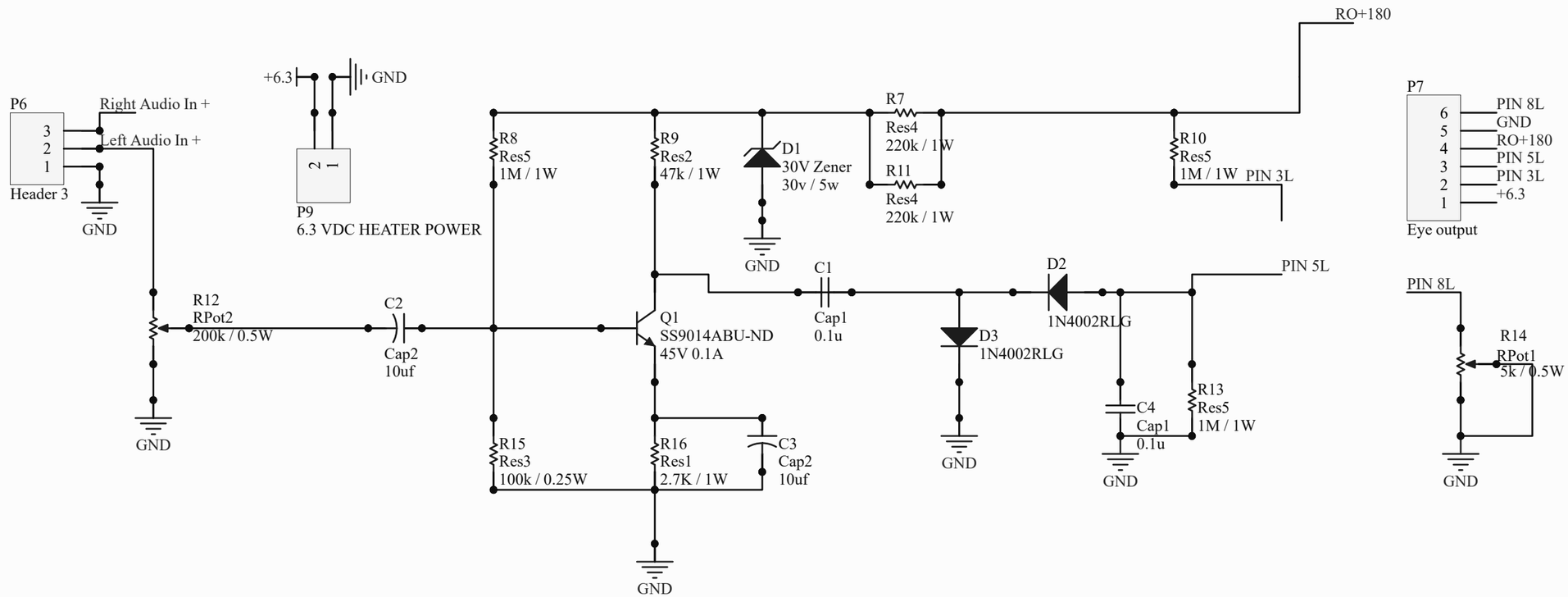

Title		
Size A	Number	Revision
Date: 6/29/2017	Sheet of	
File: C:\Users\..\MEGA2560 Left Eye Control.SchDoc	Drawn By:	