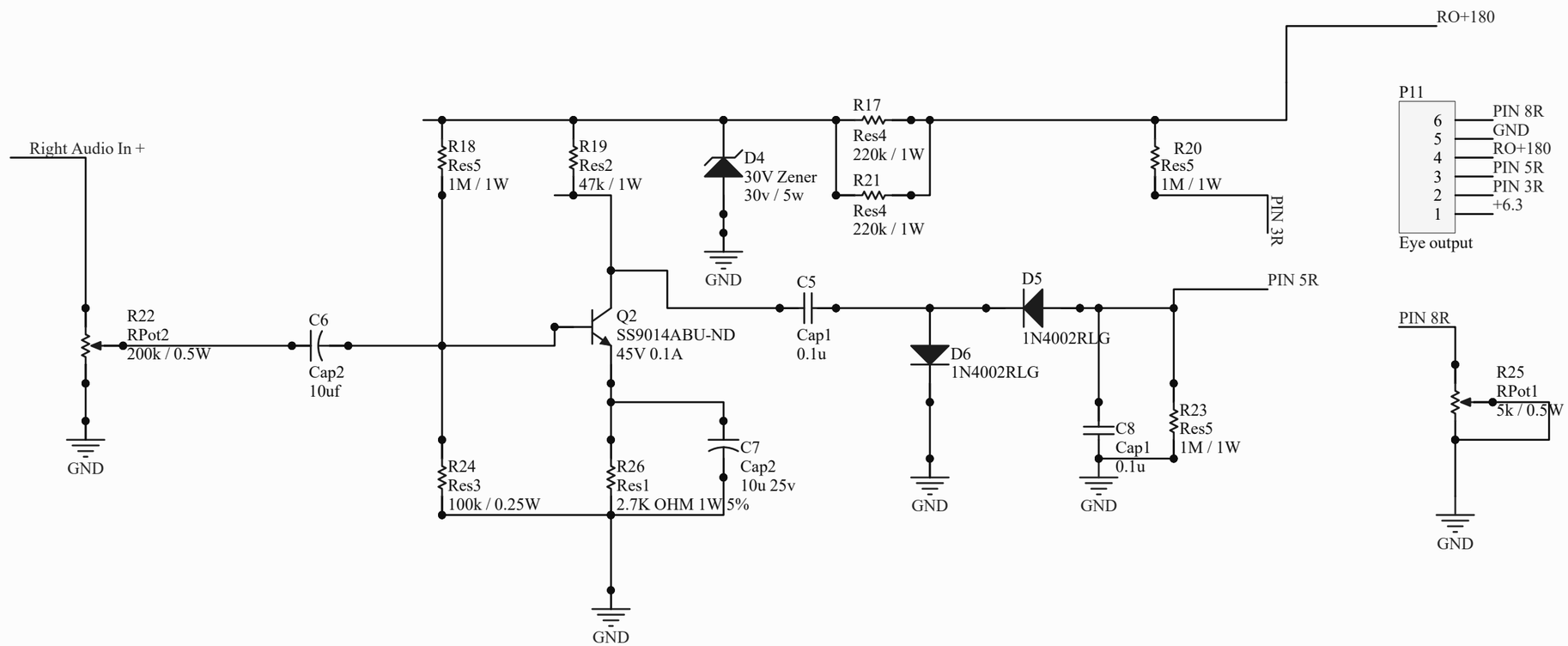

Title		
Size A	Number	Revision
Date: 6/29/2017		Sheet of
File: C:\Users\..\MEGA2560 RIght Eye Control.SchDoc		Drawn By: