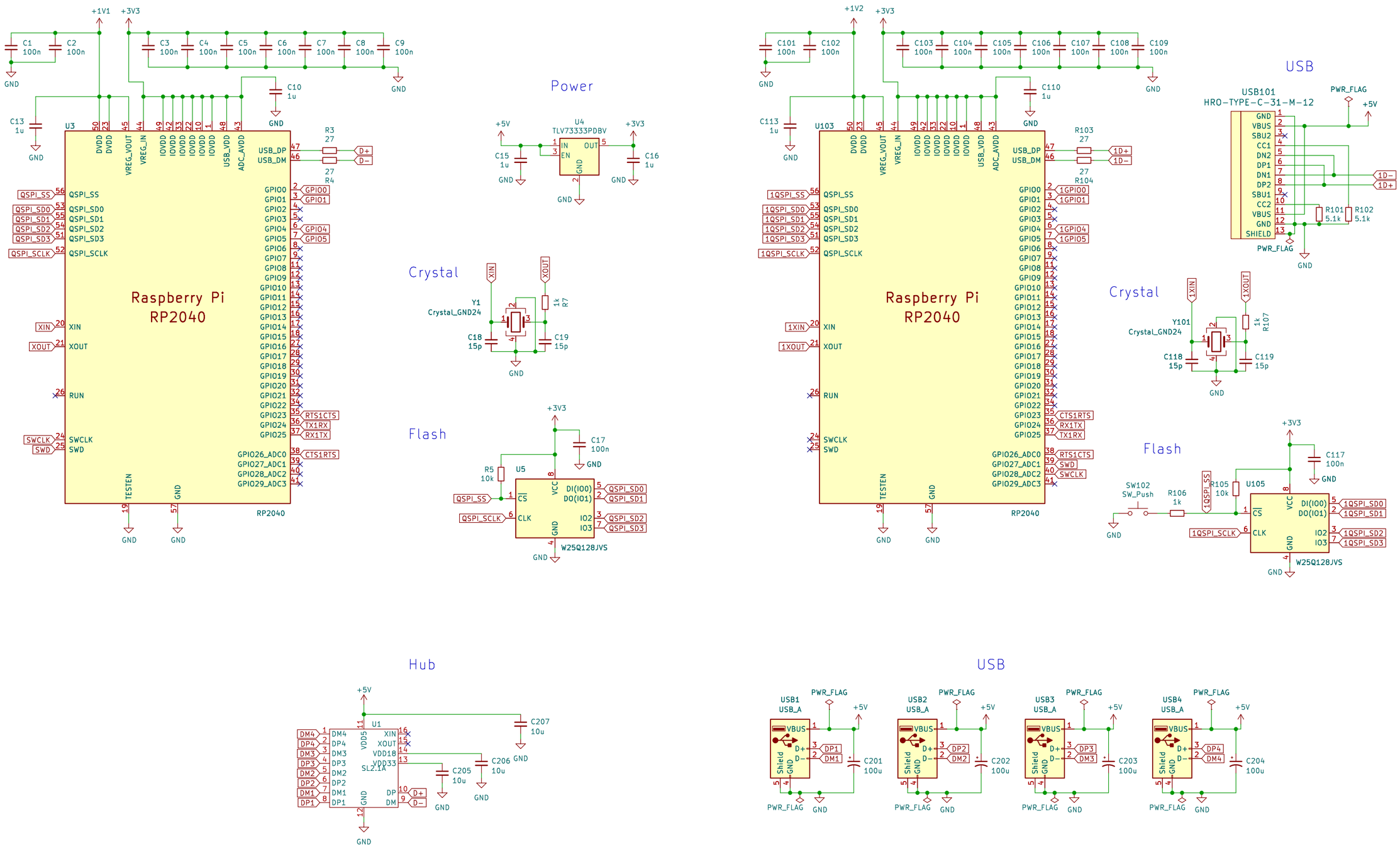
Raspberry Pi
RP2040
U3
U103
Power
U4
TLV73333PDBV
Crystal
Y1
Crystal_GND24
Y101
Flash
U5
W25Q128JVS
USB
USB101
HRO-TYPE-C-31-M-12
PWR_FLAG
Hub
U1
SL2.1A
USB1
USB2
USB3
USB4
USB_A
Shield
VBUS
+1V1
+3V3
+1V2
+5V
GND
QSPI_SS
QSPI_SD0
QSPI_SD1
QSPI_SD2
QSPI_SD3
QSPI_SCLK
XIN
XOUT
RUN
SWCLK
SWD
TESTEN
USB_DP
USB_DM
GPIO0
GPIO1
GPIO4
GPIO5
RTS1CTS
TX1RX
RX1TX
CTS1RTS
GPIO26_ADC0
GPIO27_ADC1
GPIO28_ADC2
GPIO29_ADC3
1QSPI_SS
1QSPI_SD0
1QSPI_SD1
1QSPI_SD2
1QSPI_SD3
1QSPI_SCLK
1XIN
1XOUT
1GPIO0
1GPIO1
1GPIO4
1GPIO5
1D+
1D−
D+
D−
DP1
DM1
DP2
DM2
DP3
DM3
DP4
DM4
SW102
SW_Push