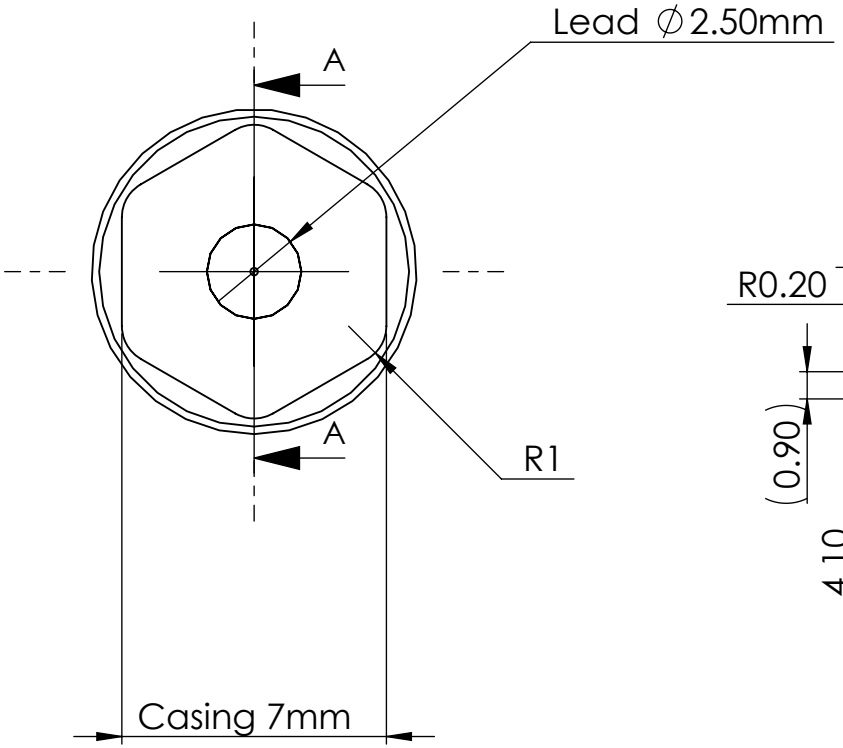

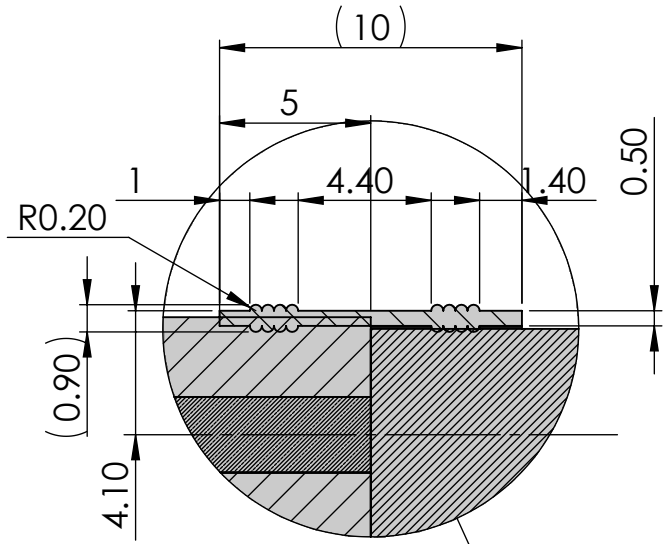

DETAIL B

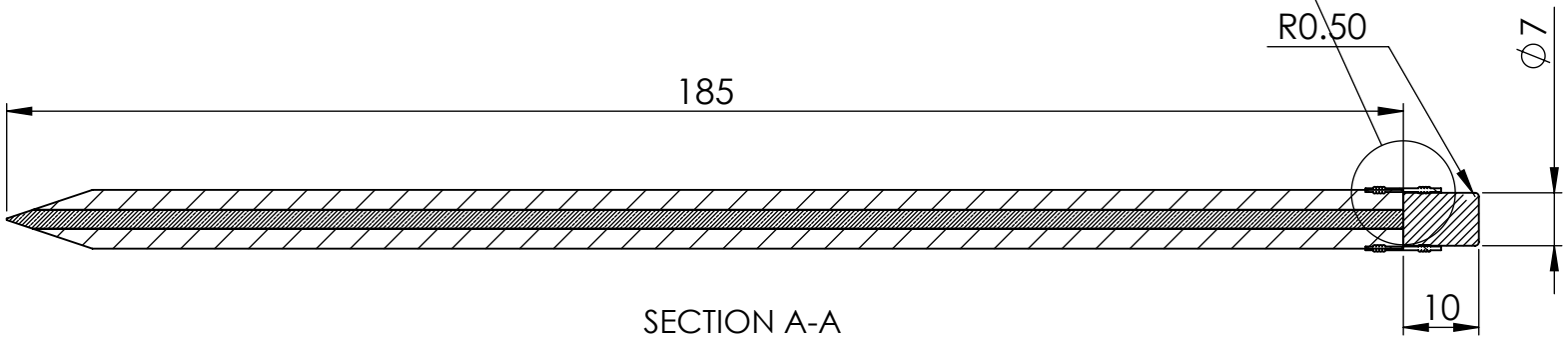

SECTION A-A
SCALE 1 : 1

DWG. NO. Pencil	
	SHEET 1 OF 1