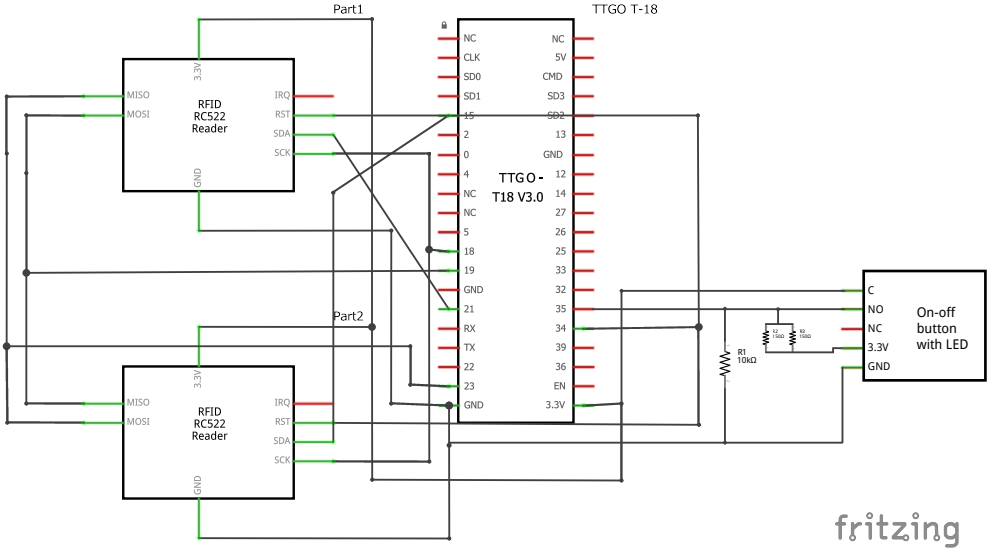
Part1
TTGO T-18
3.3V
MISO
MOSI
RFID
RC522
Reader
IRQ
RST
SDA
SCK
GND
NC
CLK
SD0
SD1
15
2
0
4
NC
NC
5
18
19
GND
21
RX
TX
22
23
GND
NC
5V
CMD
SD3
SD2
13
GND
12
14
27
26
25
33
32
35
34
39
36
EN
3.3V
TTGO -
T18 V3.0
Part2
R1
10kΩ
R2
150Ω
R3
150Ω
C
NO
NC
3.3V
GND
On-off
button
with LED
fritzing