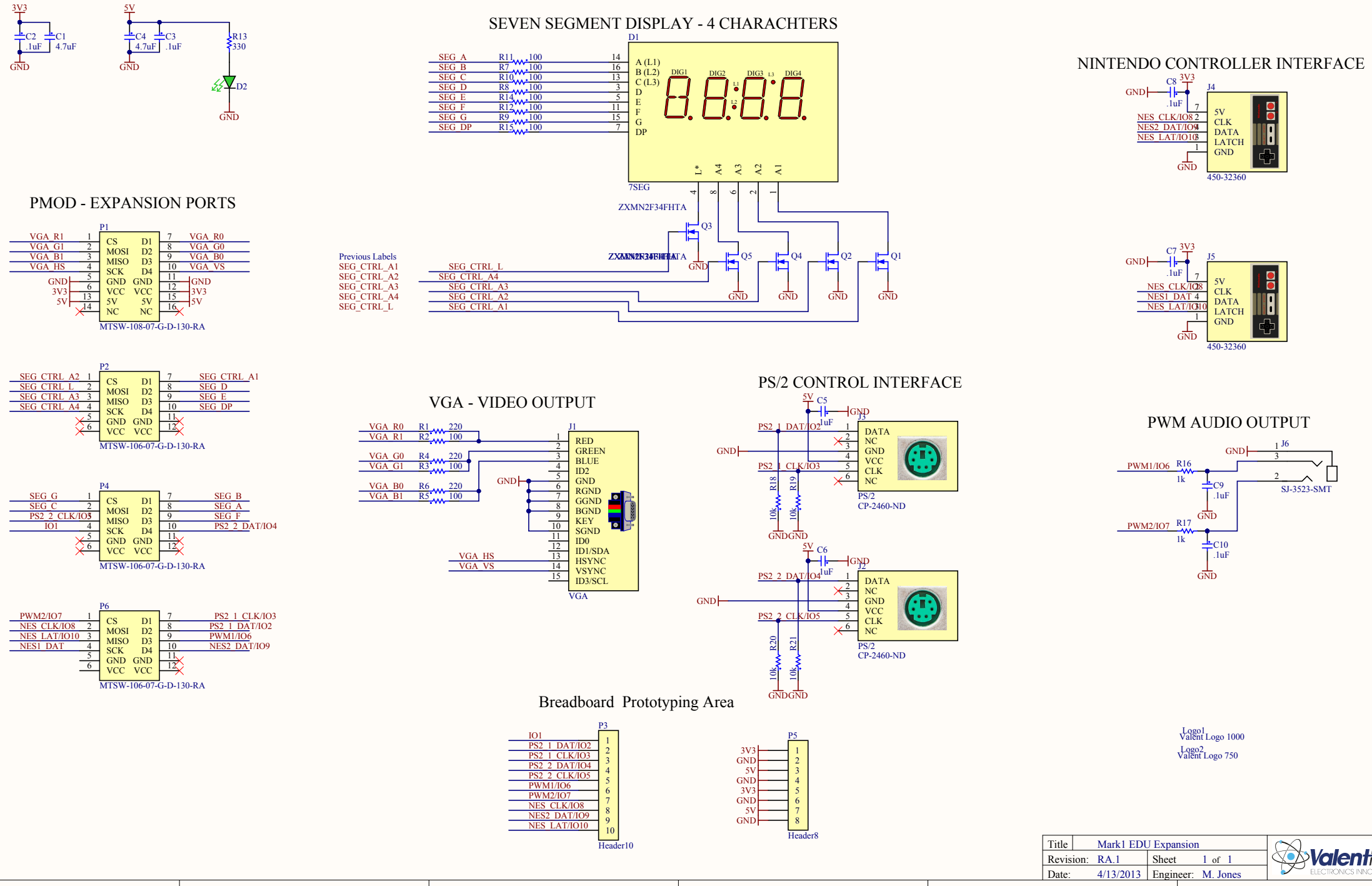
SEVEN SEGMENT DISPLAY - 4 CHARACHTERS
D1
7SEG
SEG_A R11 100 14
SEG_B R7 100 16
SEG_C R10 100 13
SEG_D R8 100 3
SEG_E R14 100 5
SEG_F R12 100 11
SEG_G R9 100 15
SEG_DP R15 100 7
A (L1)
B (L2)
C (L3)
D
E
F
G
DP
DIG1
DIG2
DIG3
DIG4
L*
A4
A3
A2
A1
ZXMN2F34FHTA
Q3
Q5
Q4
Q2
Q1
GND
Previous Labels
SEG_CTRL_A1
SEG_CTRL_A2
SEG_CTRL_A3
SEG_CTRL_A4
SEG_CTRL_L
SEG_CTRL_L
SEG_CTRL_A4
SEG_CTRL_A3
SEG_CTRL_A2
SEG_CTRL_A1
3V3
C2 .1uF
C1 4.7uF
5V
C4 4.7uF
C3 .1uF
R13 330
D2
NINTENDO CONTROLLER INTERFACE
C8 .1uF
J4
NES_CLK/IO8
NES2_DAT/IO9
NES_LAT/IO10
5V
CLK
DATA
LATCH
GND
450-32360
C7 .1uF
J5
NES_CLK/IO8
NES1_DAT
NES_LAT/IO10
PMOD - EXPANSION PORTS
P1
VGA_R1
VGA_G1
VGA_B1
VGA_HS
VGA_R0
VGA_G0
VGA_B0
VGA_VS
CS
MOSI
MISO
SCK
GND
VCC
5V
NC
D1
D2
D3
D4
MTSW-108-07-G-D-130-RA
P2
SEG_CTRL_A2
SEG_CTRL_L
SEG_CTRL_A3
SEG_CTRL_A4
SEG_CTRL_A1
SEG_D
SEG_E
SEG_DP
MTSW-106-07-G-D-130-RA
P4
SEG_G
SEG_C
PS2_2_CLK/IO5
IO1
SEG_B
SEG_A
SEG_F
PS2_2_DAT/IO4
MTSW-106-07-G-D-130-RA
P6
PWM2/IO7
NES_CLK/IO8
NES_LAT/IO10
NES1_DAT
PS2_1_CLK/IO3
PS2_1_DAT/IO2
PWM1/IO6
NES2_DAT/IO9
MTSW-106-07-G-D-130-RA
VGA - VIDEO OUTPUT
J1
VGA_R0 R1 220
VGA_R1 R2 100
VGA_G0 R4 220
VGA_G1 R3 100
VGA_B0 R6 220
VGA_B1 R5 100
VGA_HS
VGA_VS
RED
GREEN
BLUE
ID2
GND
RGND
GGND
BGND
KEY
SGND
ID0
ID1/SDA
HSYNC
VSYNC
ID3/SCL
VGA
PS/2 CONTROL INTERFACE
C5 1uF
J3
PS2_1_DAT/IO2
PS2_1_CLK/IO3
R18 10k
R19 10k
DATA
NC
GND
VCC
CLK
NC
PS/2
CP-2460-ND
C6 1uF
J2
PS2_2_DAT/IO4
PS2_2_CLK/IO5
R20 10k
R21 10k
PS/2
CP-2460-ND
PWM AUDIO OUTPUT
J6
PWM1/IO6
R16 1k
C9 .1uF
PWM2/IO7
R17 1k
C10 .1uF
SJ-3523-SMT
Breadboard Prototyping Area
P3
IO1
PS2_1_DAT/IO2
PS2_1_CLK/IO3
PS2_2_DAT/IO4
PS2_2_CLK/IO5
PWM1/IO6
PWM2/IO7
NES_CLK/IO8
NES2_DAT/IO9
NES_LAT/IO10
Header10
P5
3V3
GND
5V
Header8
Logo1
Valent Logo 1000
Logo2
Valent Logo 750
Title Mark1 EDU Expansion
Revision: RA.1
Sheet 1 of 1
Date: 4/13/2013
Engineer: M. Jones
ValentFX
ELECTRONICS INNOVATION