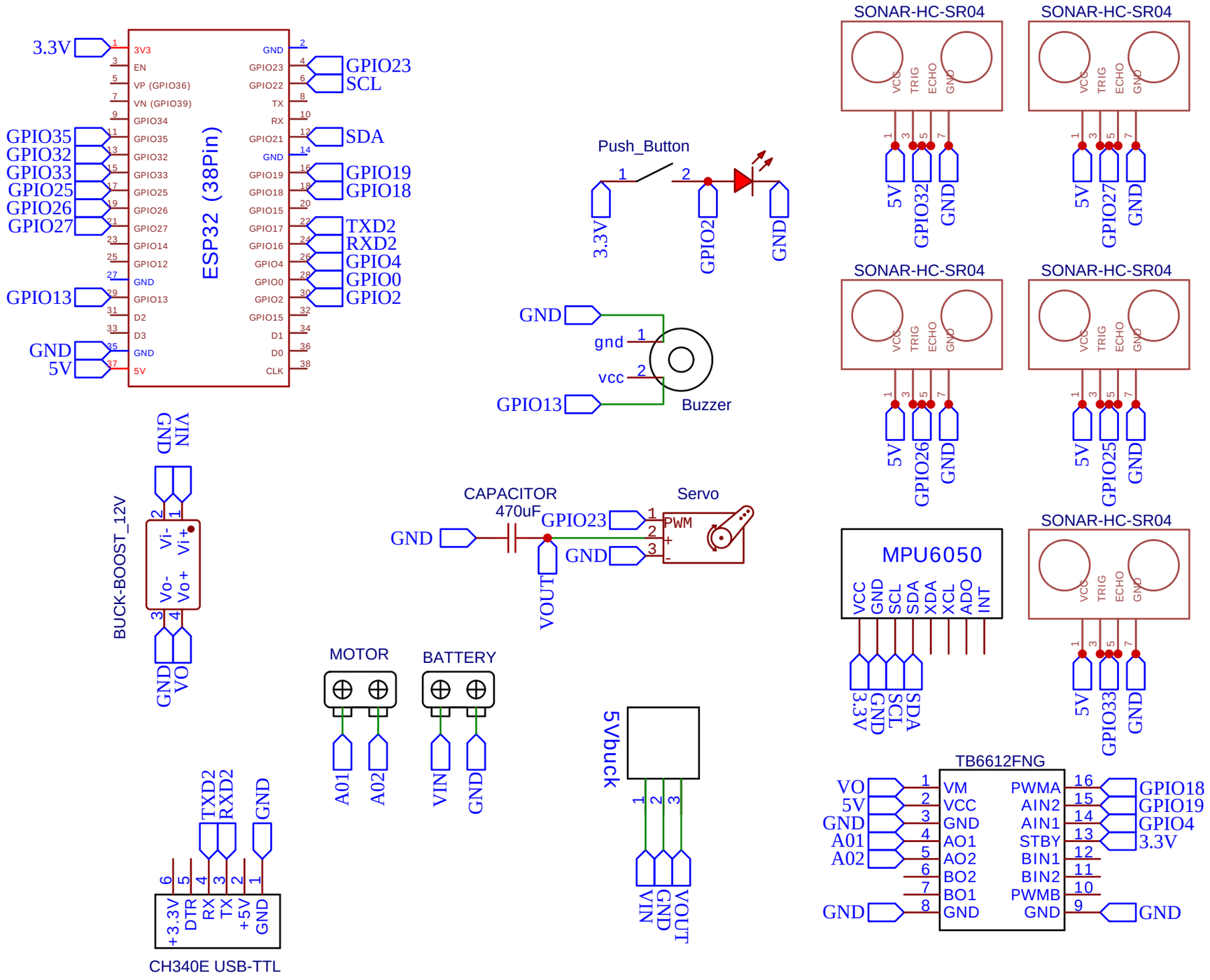

TITLE: Schematic		REV: 2.1
	Company: mechaScratch_404	Sheet: 1/1
	Date: 2023-10-31 Drawn By: mechaScratch_404	