PCF8574P has an i2c address of 0x38 instead of the normal 0x20

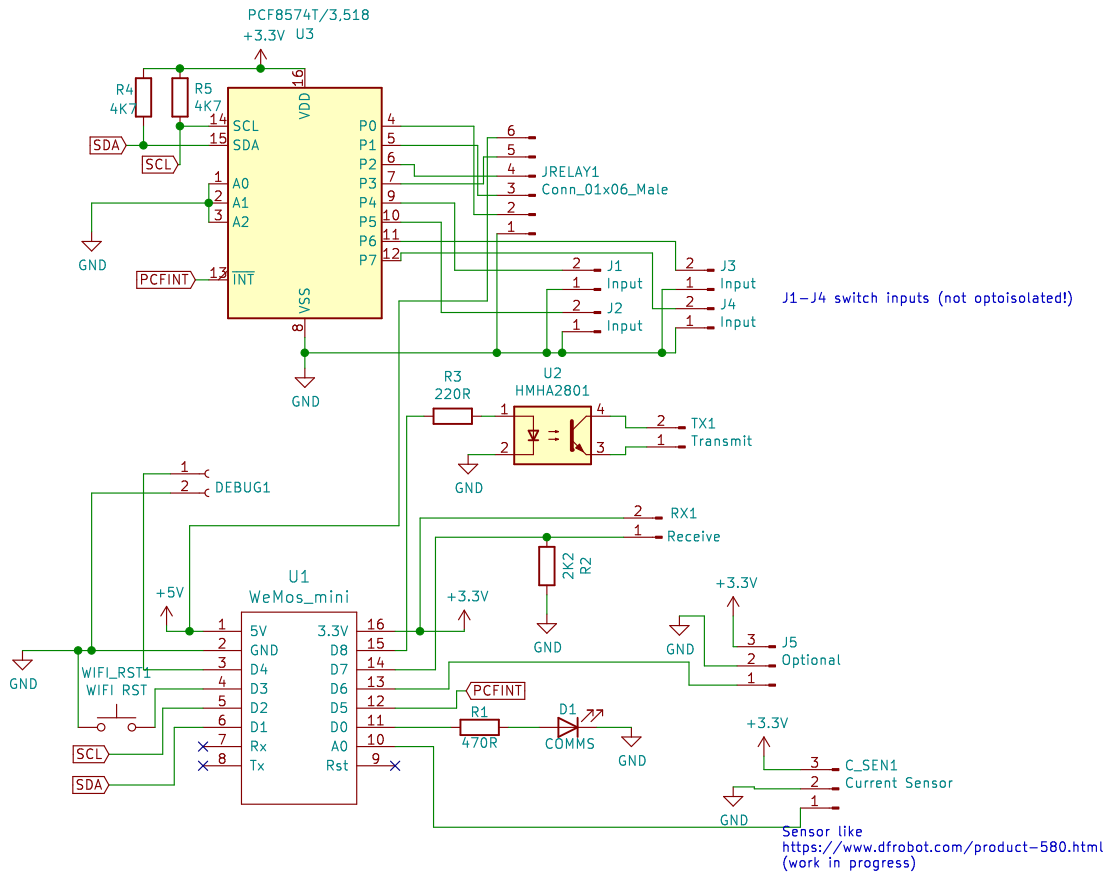

NOT FOR NEW DESIGNS

Stuart Pittaway

Sheet: /

File: ESP8266ControllerCircuit.sch

Title: diyBMS ESP8266 Controller [legacy]

Size: A4	Date: 2021-03-08	**Rev: ESP8266**
KiCad E.D.A. kicad (5.1.5)-3		Id: 1/1