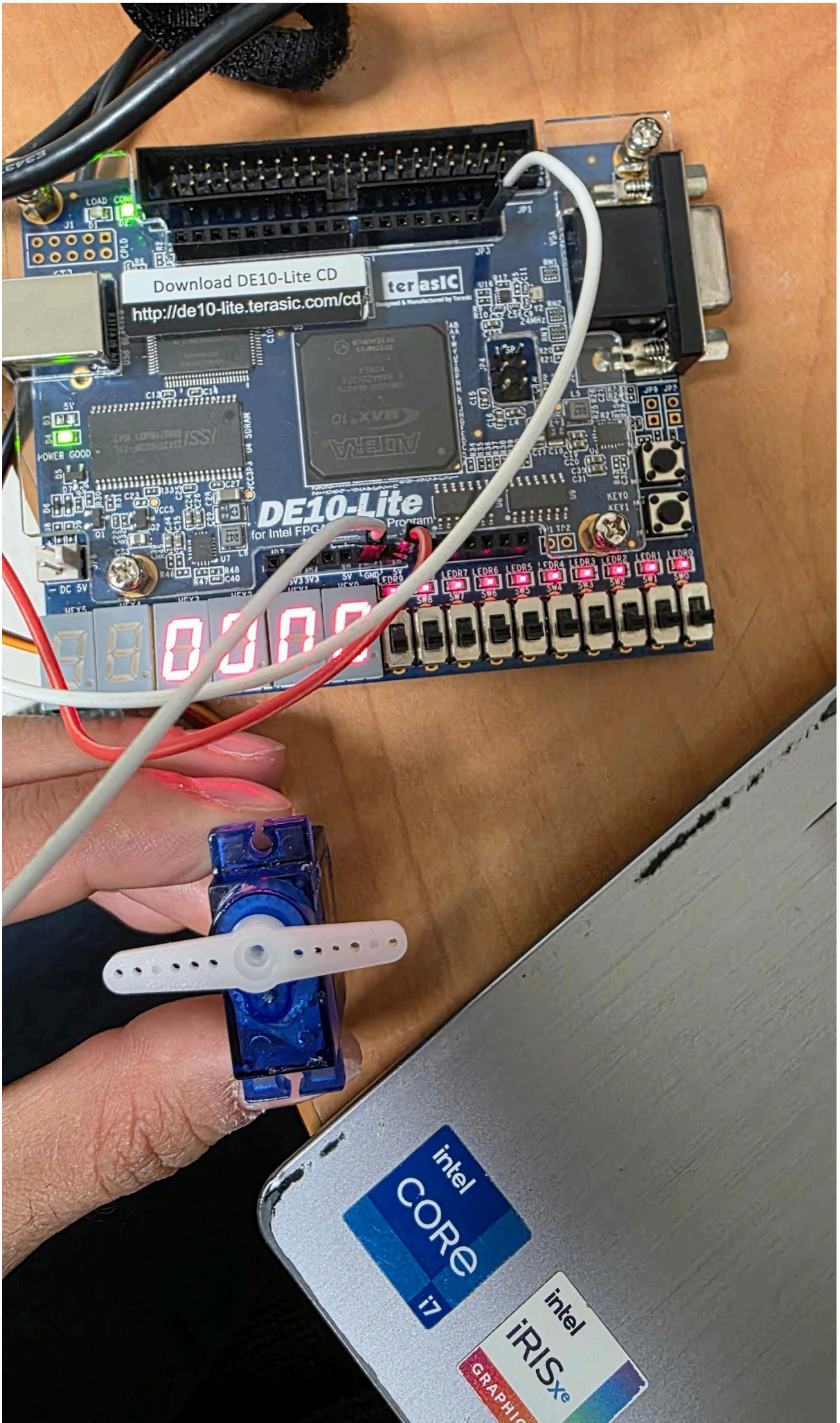
Download DE10-Lite CD
http://de10-lite.terasic.com/cd
terasic
DE10-Lite
POWER GOOD
intel
CORE
i7
intel
iRISxe

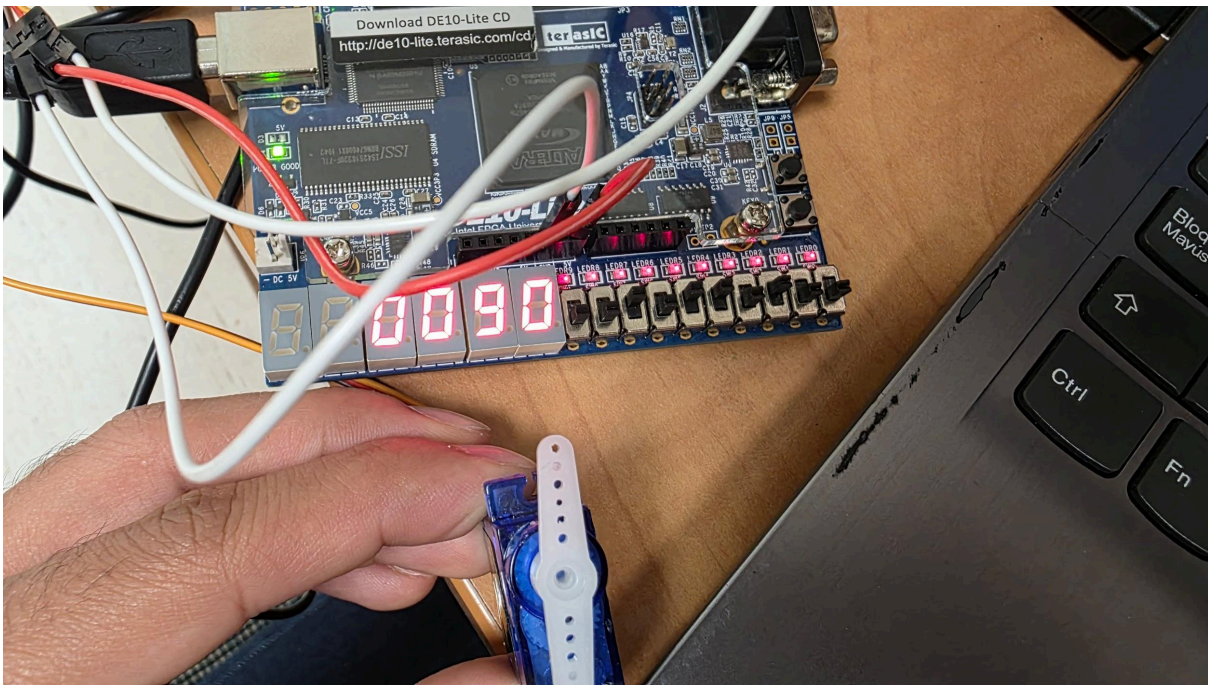
Download DE10-Lite CD
http://de10-lite.terasic.com/cd
terasic
0090
Ctrl
Fn

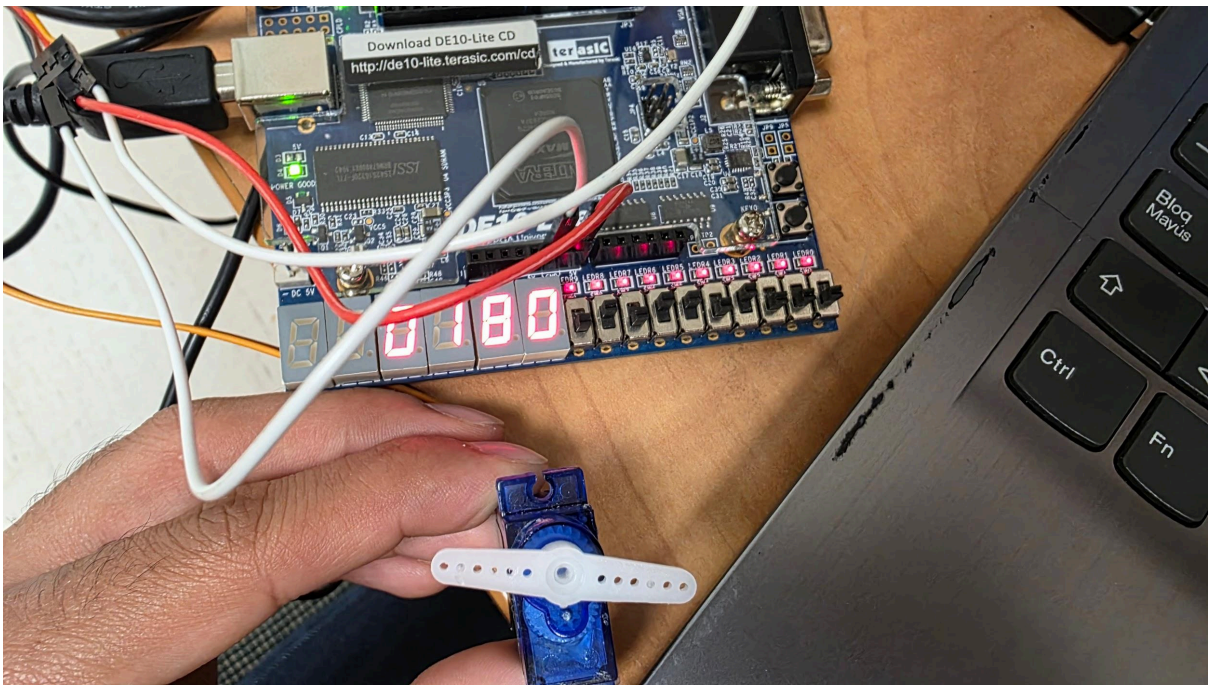
Download DE10-Lite CD
http://de10-lite.terasic.com/cd
terasic
0180
Bloq Mayus
Ctrl
Fn

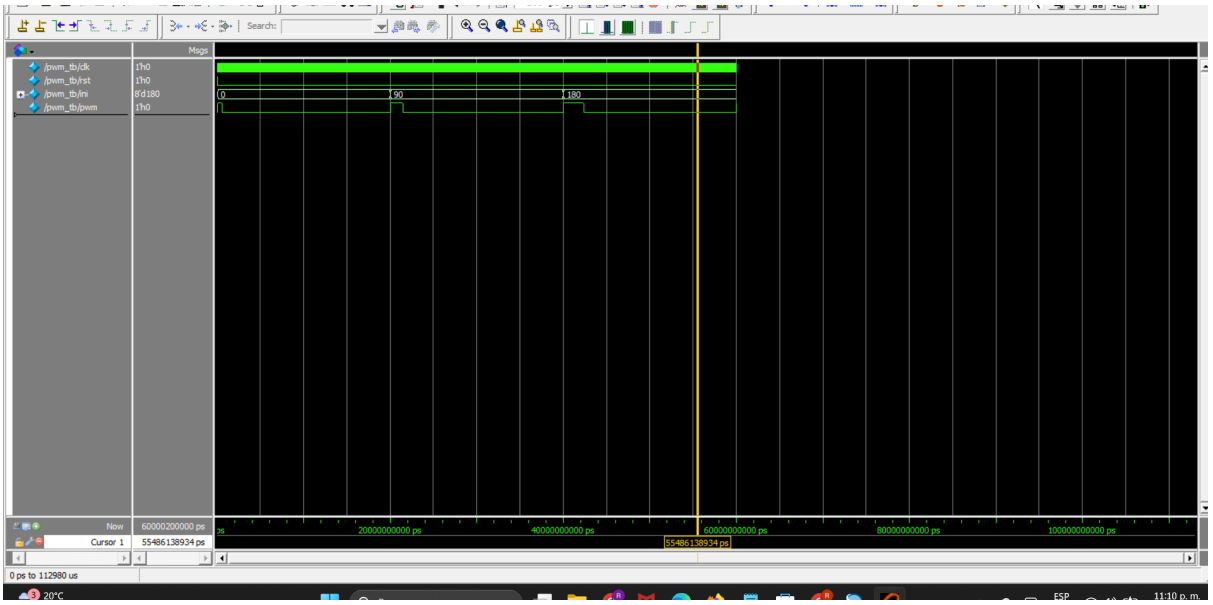
/pwm_tb/clk
/pwm_tb/rst
/pwm_tb/ini
/pwm_tb/pwm
Msgs
Now
Cursor 1
0 ps to 112980 us

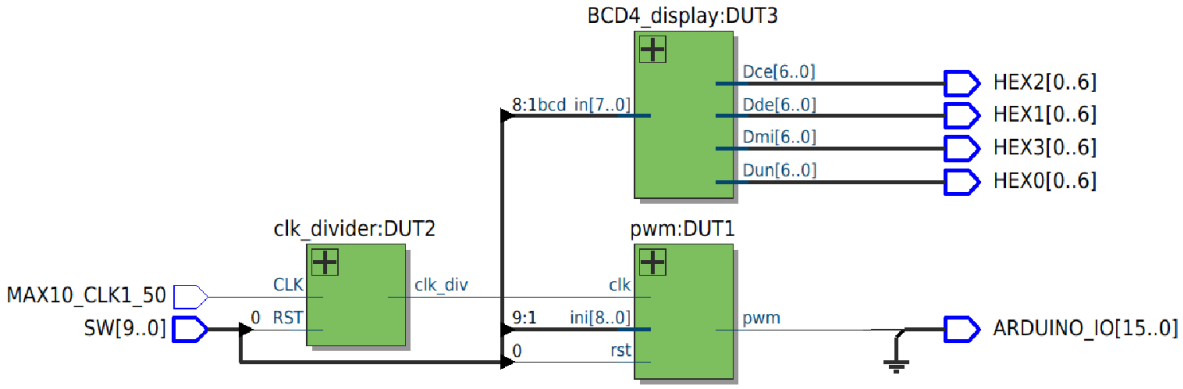
BCD4_display:DUT3
Dce[6..0]
Dde[6..0]
Dmi[6..0]
Dun[6..0]
8:1bcd_in[7..0]
HEX2[0..6]
HEX1[0..6]
HEX3[0..6]
HEX0[0..6]
clk_divider:DUT2
CLK
clk_div
0 RST
pwm:DUT1
clk
9:1 ini[8..0]
0 rst
pwm
MAX10_CLK1_50
SW[9..0]
ARDUINO_IO[15..0]