Termination, Power & Connectors

File: Termination.kicad_sch

SCSI Host Controller

File: scsi2.kicad_sch

Zorro III bus

File: zorro3.kicad_sch

CPLD, Flash & Clock

File: cpld.kicad_sch

Amiga Cheetah 4770 UW SCSI Host Controller

Advanced UW SCSI Controller Board
This Zorro III board is based on the A4091 which was designed and sold by Commodore and DKB Software.
Features:

- SPI Boot ROM
- LSI 53C770 SCSI II controller
- 68 pin internal connector
- 68 pin external SCSI2 connector
- Active SCSI termination
- Zorro III bus support

Based on the A4091 SCSI2 controller. The Commodore A4091 was reverse-engineered by Stefan Reinauer and Chris Hooper.

GitHub Project:
https://github.com/A4091/a4092-dev

amiga.technology		
Sheet: /		
File: A4770.kicad_sch		
Title: Cheetah UW		
Size: A4	Date:	**Rev: PROTO1**
KiCad E.D.A. 9.0.7		Id: 1/5

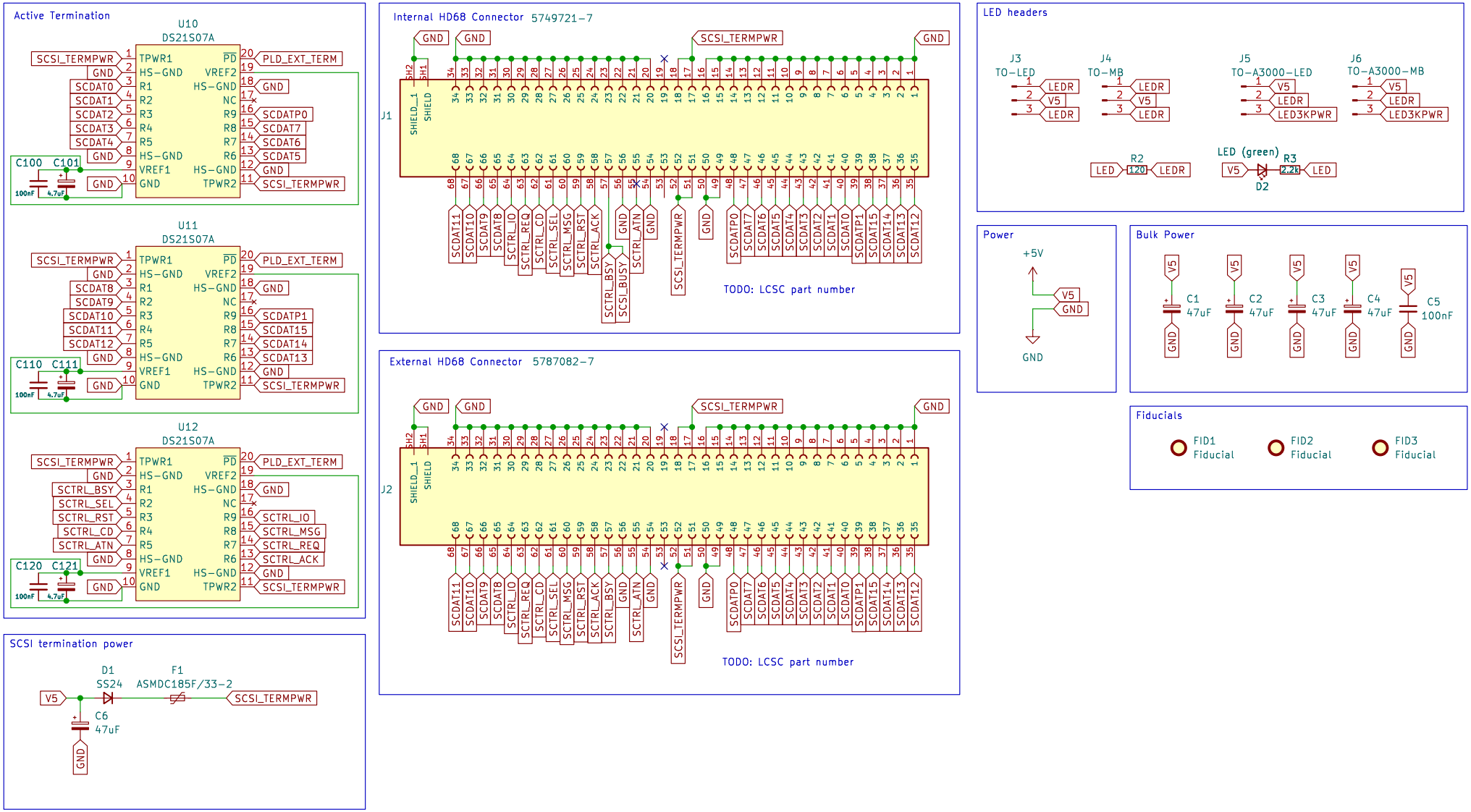

amiga.technology

Sheet: /Termination, Power & Connectors/

File: Termination.kicad_sch

Title: Cheetah UW

Size: A4	Date:	Rev: PROTO1
KiCad E.D.A. 9.0.7		Id: 2/5

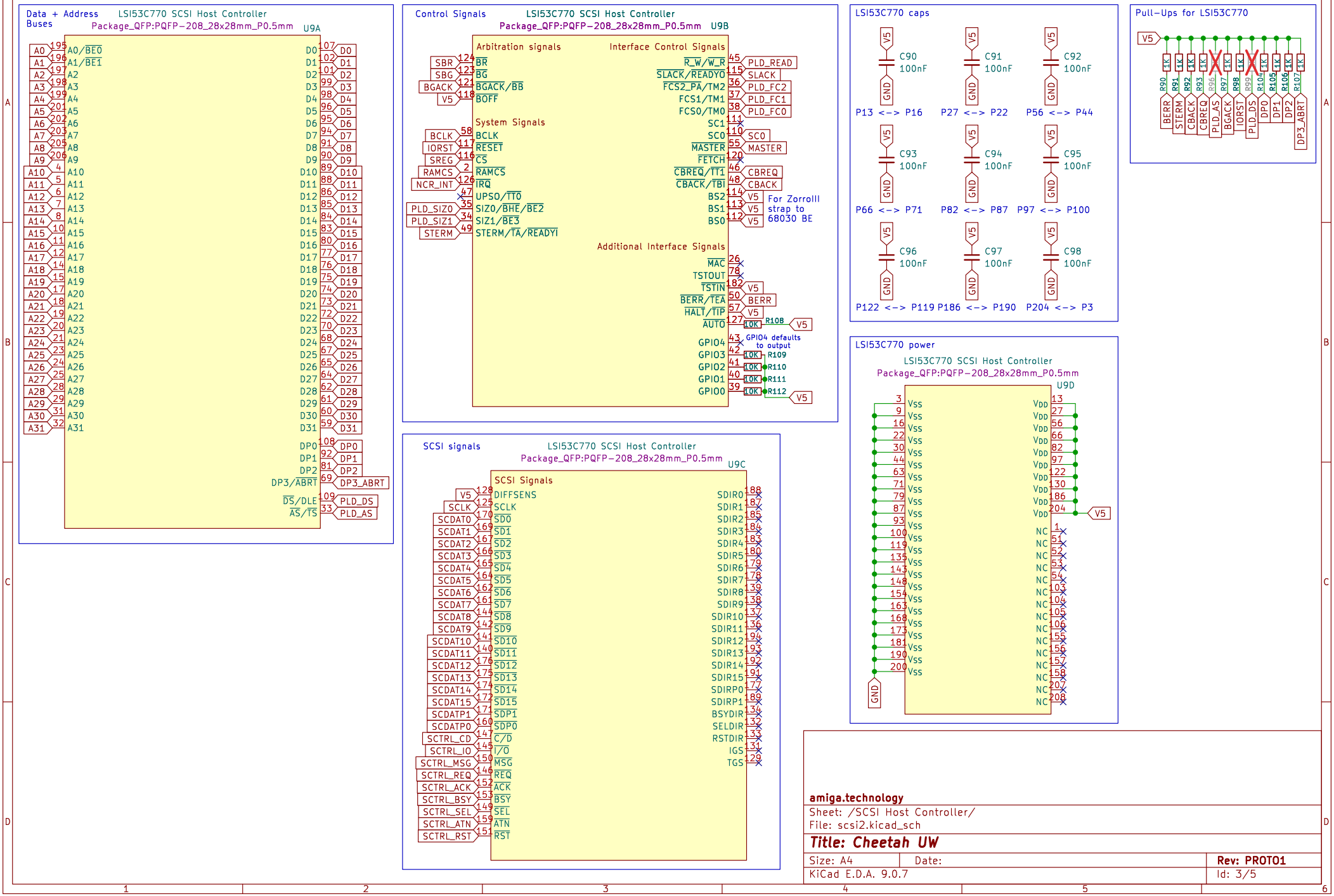
Data + Address Buses
LSI53C770 SCSI Host Controller
Package_QFP:PQFP-208_28x28mm_P0.5mm
U9A
Control Signals
LSI53C770 SCSI Host Controller
Package_QFP:PQFP-208_28x28mm_P0.5mm
U9B
Arbitration signals
Interface Control Signals
System Signals
Additional Interface Signals
For Zorroll strap to 68030 BE
GPIO4 defaults to output
SCSI signals
LSI53C770 SCSI Host Controller
Package_QFP:PQFP-208_28x28mm_P0.5mm
U9C
SCSI Signals
LSI53C770 caps
P13 <-> P16
P27 <-> P22
P56 <-> P44
P66 <-> P71
P82 <-> P87
P97 <-> P100
P122 <-> P119
P186 <-> P190
P204 <-> P3
Pull-Ups for LSI53C770
LSI53C770 power
LSI53C770 SCSI Host Controller
Package_QFP:PQFP-208_28x28mm_P0.5mm
U9D
amiga.technology
Sheet: /SCSI Host Controller/
File: scsi2.kicad_sch
Title: Cheetah UW
Size: A4
Date:
Rev: PROTO1
KiCad E.D.A. 9.0.7
Id: 3/5

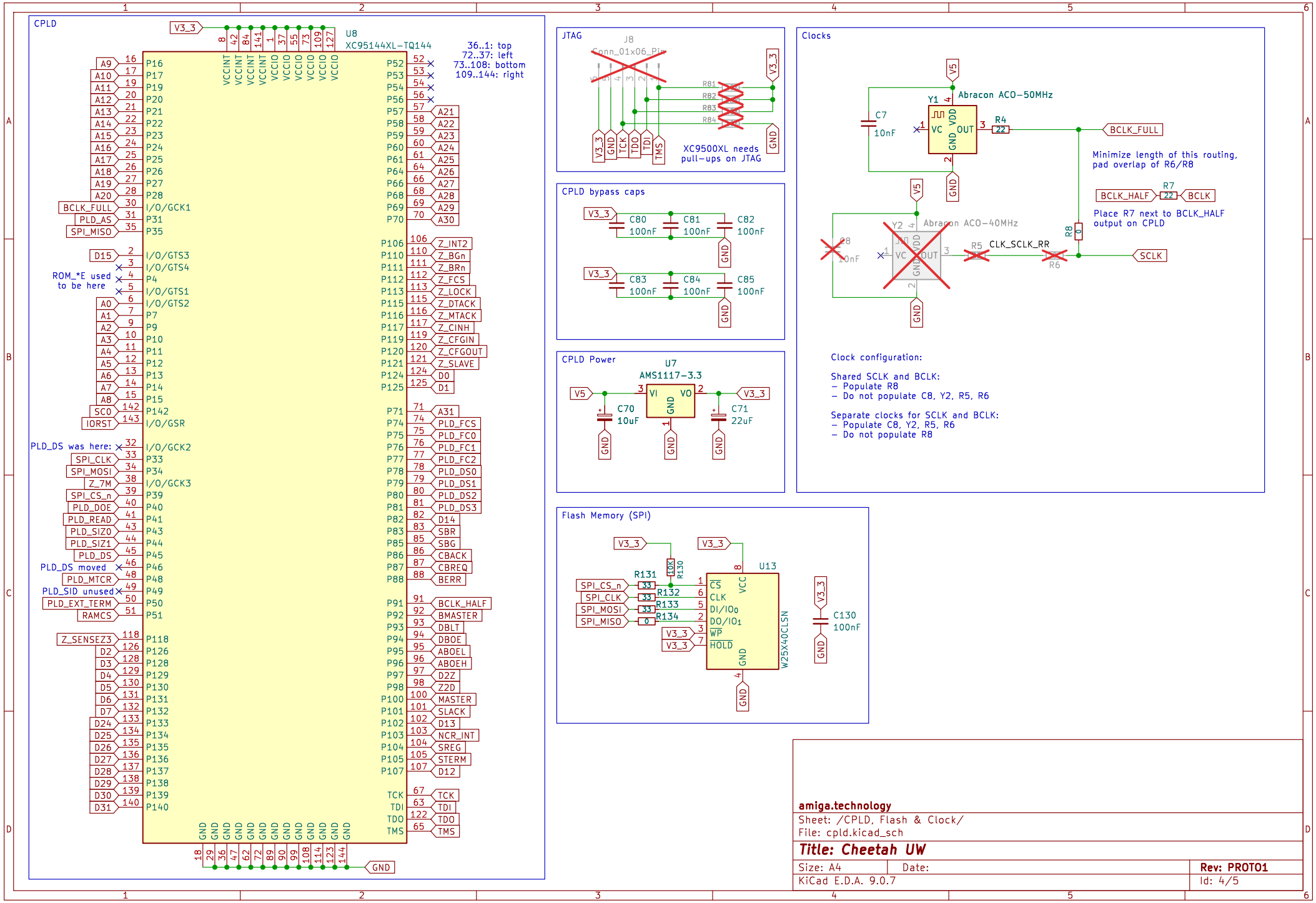
CPLD
U8
XC95144XL-TQ144
36..1: top
72..37: left
73..108: bottom
109..144: right
JTAG
J8
Conn_01x06_Pin
XC9500XL needs pull-ups on JTAG
CPLD bypass caps
CPLD Power
U7
AMS1117-3.3
Clocks
Y1
Abracon ACO-50MHz
Y2
Abracon ACO-40MHz
Minimize length of this routing, pad overlap of R6/R8
Place R7 next to BCLK_HALF output on CPLD
Clock configuration:
Shared SCLK and BCLK:
– Populate R8
– Do not populate C8, Y2, R5, R6
Separate clocks for SCLK and BCLK:
– Populate C8, Y2, R5, R6
– Do not populate R8
Flash Memory (SPI)
U13
W25X40CLSN
amiga.technology
Sheet: /CPLD, Flash & Clock/
File: cpld.kicad_sch
Title: Cheetah UW
Size: A4
Date:
Rev: PROTO1
KiCad E.D.A. 9.0.7
Id: 4/5

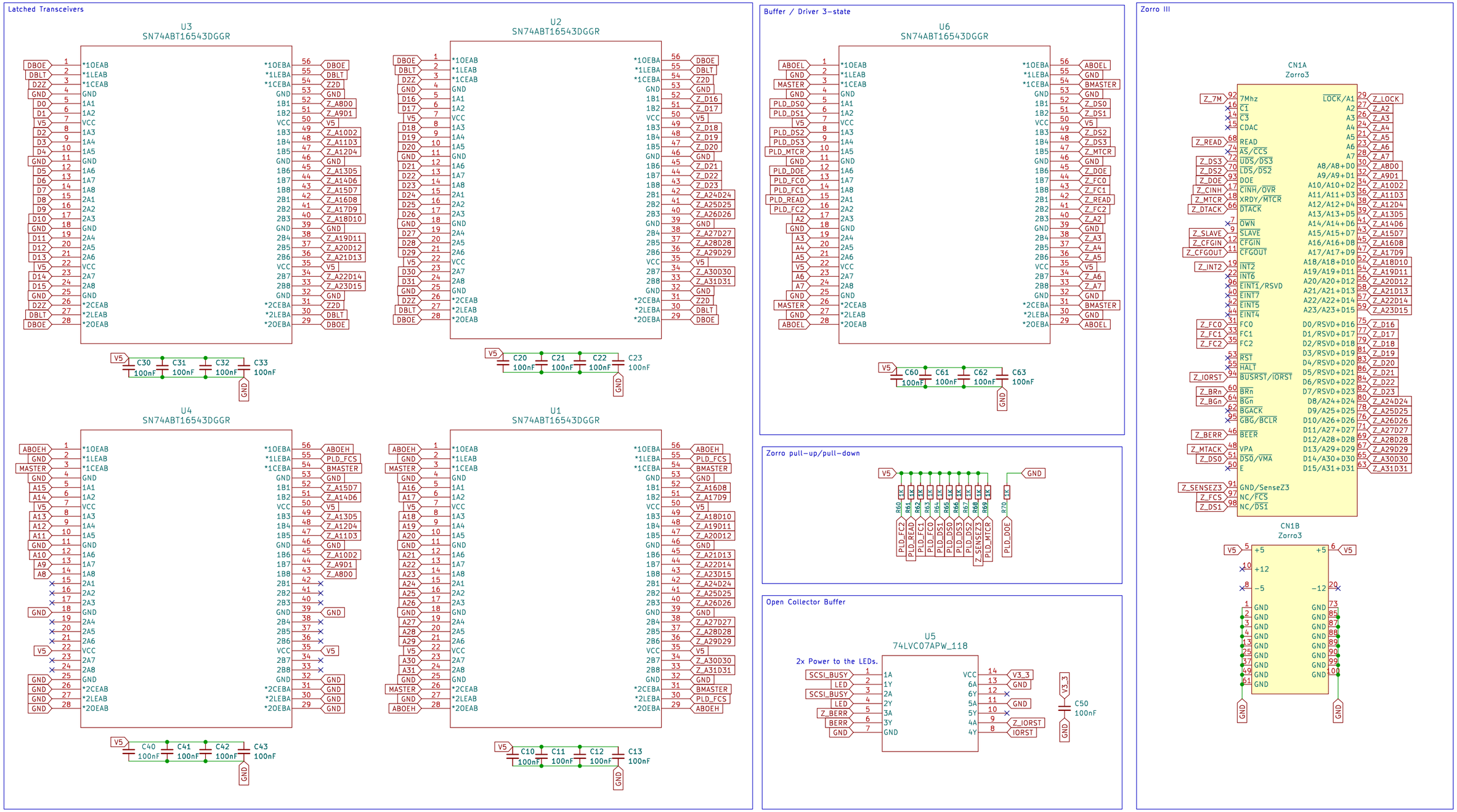

amiga.technology

Sheet: /Zorro III bus/

File: zorro3.kicad_sch

Title: Cheetah UW

Size: A3	Date:	Rev: PROTO1
KiCad E.D.A. 9.0.7		Id: 5/5