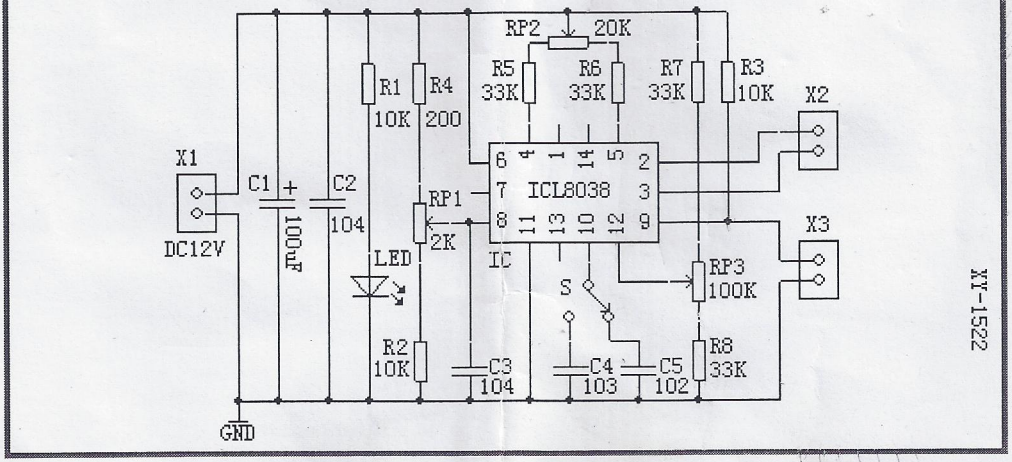
RP2
20K
R5
33K
R6
33K
R7
33K
R3
10K
X2
R1
10K
R4
200
X1
C1
+
100uF
C2
104
DC12V
RP1
2K
ICL8038
6
4
1
14
5
2
7
3
8
11
13
10
12
9
IC
X3
LED
RP3
100K
S
R2
10K
C3
104
C4
103
C5
102
R8
33K
GND
XY-1522