2024 IEEE International Conference on Blockchain and Distributed Systems Security (ICBDS)
Pune, India. Oct 17 - 19, 2024

Sharding:A Scalability Solutions for Blockchain Networks

Dattatray Raghunath Kale
Department of Computer Science & Engg, MIT School of Computing MIT Art, Design and Technology University
Pune, India
kaledatta156@gmail.com

Dr. Amolkumar N Jadhav
Department of Computer Science & Engg, Annasaheb Dange College of Engineering and Technology
Ashta, India
pramolkumar451@gmail.com

Dr. Kruishna Prasad K
Department of Computer Science & Engg, Shrinivas University,
Mangalore, India
krishnaprasadkcci@srinivasuniversity.edu.in

Somanath Janardan Salunkhe
Department of Computer Science & Engg, D Y Patil Agriculture and Technical University
Talsande, India
somanathsalunkhe@gmail.com

Dr.Sumit Hirve
Department of Computer Science & Engg, MIT School of Computing MIT Art, Design and Technology University
Pune, India
sumit.hirve@mituniversity.edu.in

Dr.Chandrashekhar Goswami
Faculty of Computing and Informatics, Sir Padampat Singhania University,
Udaipur, Rajasthan
shekhar.goswami358@gmail.com

2024 IEEE International Conference on Blockchain and Distributed Systems Security (ICBDS) | 979-8-3503-5434-8/24/$31.00 ©2024 IEEE | DOI: 10.1109/ICBDS61829.2024.10837088

***Abstract*—Blockchain technology's decentralized and immutable data storage has changed a number of sectors. But typical blockchain networks scalability issues prevent them from being widely used for large-scale applications. By dividing the blockchain network into smaller, more controllable sections known as shards, sharding has become a viable remedy for scalability issues. This paper offers a thorough introduction to sharding as a blockchain network scalability solution. We explore the basic ideas of sharding as well as its advantages, drawbacks, and several sharding strategies. We also analyze experimental results and real-world implementations to assess how well sharding contributes to increased blockchain scalability. Lastly, we talk about possible developments in sharding approaches and future research paths to further improve the scalability of blockchain networks.**

Keywords— Sharding, Blockchain Scalability, Distributed Ledger Technology, Consensus Mechanisms, Decentralization

I. INTRODUCTION

Blockchain technology is a distributed, decentralized ledger system that maintains an irreversible and verifiable record of transactions across several computers [1]. Data integrity and security are ensured by a chain of blocks that is created on the blockchain by each block containing a cryptographic hash of the previous block. Figure1 shows how a blockchain is structured. Consensus mechanisms, such Proof of Work (PoW) or Proof of Stake (PoS)[2], are used to validate and confirm transactions before grouping them into blocks and adding them to the blockchain.[3]Its provision of data integrity, authenticity, and user transparency has the potential to change a number of industries, including financial and non-finance [4].Blockchain technology has been utilized extensively in a number of industries, including tracking identities, vendor networks, gaming platforms, food monitoring, value trade, and others.[5] It has recently come to light as a disruptive and transformative technology with great trust and security potential. This technology is especially well-liked in the cryptocurrency field, where it is employed to generate decentralized public ledgers.[6]

Despite being groundbreaking, blockchain technology has serious scaling issues. Low throughput, excessive transaction delay, and energy usage are some of these difficulties.[7] Due to the technology's success in decentralized networks, interest has grown; nevertheless, there are still issues that need to be resolved, such as scalability.[8] Blockchain technology, which is renowned for being decentralized and trustless, has scalability issues since each node must maintain the history of the entire chain, which affects scalability.[9] Concerns over the scalability of the blockchain are raised by the performance issues with poor throughput and excessive transaction latency in cryptocurrencies like Bitcoin.[10]

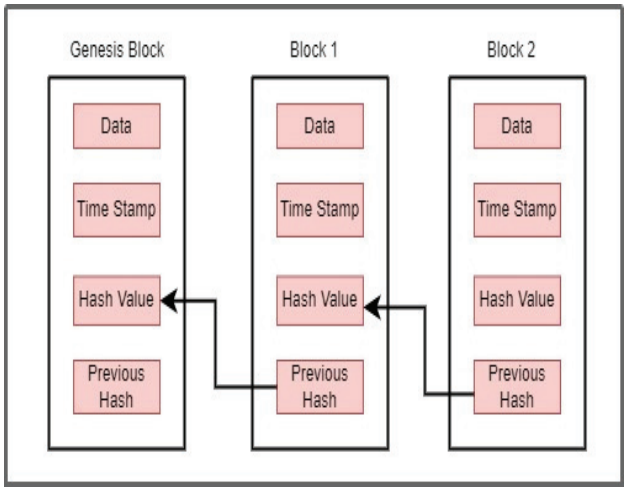

Fig. 1. The structure of a Blockchain system

The well-known scalability trilemma was first articulated by Ethereum co-founder Vitalik Buterin [11], who said that trade-offs between three important blockchain features—decentralization, security, and scalability—are unavoidable. According to the scalability trilemma shown in figure 2, achieving all three qualities at once is challenging [12] Often, one component must suffer in order to improve another. By requiring more powerful hardware to participate in the network, raising the block size or transaction throughput to improve scalability, for instance, may weaken decentralization and may lead to the centralization of mining power. In a similar vein, adding more security measures—like intricate agreement processes—might hinder scalability by raising the time and cost of transaction validation. Blockchain's fundamental and inherent characteristics are decentralization [13] and security [14], with scalability [15] posing the biggest

Authorized licensed use limited to: Chiang Mai University provided by UniNet. Downloaded on September 18,2025 at 05:34:15 UTC from IEEE Xplore. Restrictions apply.

obstacle. In order to overcome these obstacles and realize the full potential of blockchain technology, sharding has emerged as a viable scalability solution [16] By horizontally splitting the blockchain network into smaller groups known as shards, each of which is in charge of handling a certain percentage of the network's transactions, the process of sharding is carried out. Sharding is a key component that allows transactions to be processed in parallel by several node clusters, which greatly improves the scalability of blockchain networks. It maximizes performance by dividing the total transaction processing load and lowering the costs of computation, storage, and communication for each node [17][18].

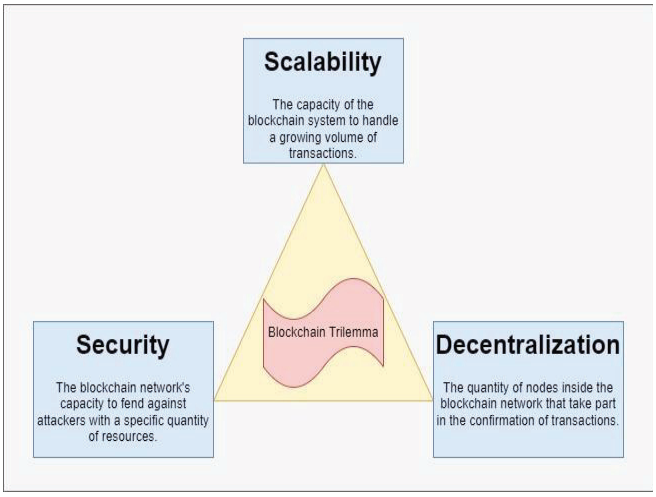

Fig. 2. The scalability trilemma

II. FUNDAMENTALS OF SHARDING

A. Definition and concept of Sharding

Sharding is a database splitting technique that blockchain systems use to increase scalability because it was developed in response to the ongoing problem of blockchain scalability. [19]. In essence, each shard is a tiny database that holds a portion of the whole data. The concept is to divide nodes into groups that each carry out particular activities without requiring fine-grained synchronization.[20] Even though distributed systems and databases are frequently brought up when discussing sharding, formal mathematics can still be used to explain the idea.

Let's consider a dataset $\boldsymbol{D}$ that we want to shard into $\boldsymbol{N}$ distinct subsets $\boldsymbol{S1}, \boldsymbol{S2}, \boldsymbol{S3}, \ldots . \boldsymbol{S_N}$. Mathematically, sharding can be represented as a function $\boldsymbol{f}$ that maps each element in $\boldsymbol{D}$ to one of the $\boldsymbol{N}$ subsets:

$$\boldsymbol{f}: \boldsymbol{D} \rightarrow \{\boldsymbol{S1}, \boldsymbol{S2}, \boldsymbol{S3}, \ldots . \boldsymbol{S_N}\} \tag{1}$$

Usually, the definition of the function $\boldsymbol{f}$ is predicated on a shard key $\boldsymbol{K}$, which is an aspect or feature of the data that determines how elements are assigned to shards. For instance, the function $\boldsymbol{f}$ might be defined as follows if $\boldsymbol{K}$ is a hash function applied to a particular data attribute:

$$\boldsymbol{f}(\boldsymbol{x}) = \boldsymbol{hash}(\boldsymbol{x}) \ \boldsymbol{mod} \ \boldsymbol{N} \tag{2}$$

where $\boldsymbol{x}$ is an element in the dataset $\boldsymbol{D}$, and $\boldsymbol{hash}(\boldsymbol{x})$ is the hash value of the shard key $\boldsymbol{K}$ for element $\boldsymbol{x}$. This function ensures that each element is assigned to one of the $\boldsymbol{N}$ shards based on the result of the hash function.

Applying sharding technology to the blockchain creates many subnetworks, or shards, within the blockchain network. A portion of each subnetwork will comprise nodes, and each shard will be randomly assigned to store data and transactions inside the network. This reduces the amount of work that each node must perform and allows for the simultaneous processing of transactions across various shards, increasing network transaction speed.

B. Comparision of Sharding with Traditional Blockchain Structure

Compared to conventional blockchain systems, sharding in blockchain architecture provides a number of benefits. Increasing transaction speed in a standard blockchain network is challenging mostly because each node in the network needs to confirm the transaction in order to assure security. Furthermore, the majority of blockchains consist of a single chain structure, with miners vying for the accounting rights of the subsequent block, and most blockchains having a set average generation time. For instance, every ten minutes, Bitcoin creates a new block. Even when more people become miners, the blockchain will automatically raise the difficulty of mining in order to maintain a fixed block creation rate of one every ten minutes. This is why the blockchain is not scalable an increase in processing power cannot speed up transactions.

Large-scale access requirements cause scalability problems for traditional blockchain, which causes delays in data processing and verification [21], However, by grouping validators, sharding improves scalability and increases throughput linearly with the number of shards [22]. Sharded blockchain systems, such as TOPSIS-based sharding, balance node performance among shards to increase system throughput while traditional blockchain suffers from low throughput and excessive latency [23]. Overall, sharding improves scalability, throughput, and efficiency across a range of applications, outperforming more conventional methods.

C. Key Components and Principles of Sharding

The goal of sharding is to increase the scalability of blockchains by breaking nodes into smaller groups known as shards, each of which is responsible for managing a certain amount of the network's burden [24]. This division improves efficiency by parallelizing the ledger protocol, which lowers the overhead in shard consensus [25]. The motivation mechanism, intra-shard consensus, cross-shard transaction processing, epoch randomization, node assignment, shard reconfiguration, and node selection are the essential elements of sharding [20]. Implementing consensus techniques like Proof-of-Stake (PoS) and useful Byzantine Fault Tolerance (pBFT) to handle scalability concerns are essential elements of sharding-based PoS blockchain protocols. Furthermore, sharding safety and liveness are kept apart so that, in response to the system's corruption ratio, shard settings can be dynamically adjusted, guaranteeing maximum efficiency without sacrificing security. Sharding is essential for preventing collusion and free-riding among nodes, and any strategies must take the leader's role in consensus participation into account. These elements are necessary to guarantee the security and functionality of the system. Developers may efficiently design, deploy, and maintain sharded databases to grow their systems horizontally and handle massive volumes of data by comprehending these elements and ideas. In sharding solutions, consistent hashing is utilized to spread a database evenly among servers.[26].

Authorized licensed use limited to: Chiang Mai University provided by UniNet. Downloaded on September 18,2025 at 05:34:15 UTC from IEEE Xplore. Restrictions apply.

III. RELATED WORK

This section summarizes relevant research on sharding technologies. Numerous investigations have been carried out to tackle the scalability issues in blockchain technology by means of sharding methods. Technology sharding is a not novel idea. It is mostly used to optimize sizable commercial databases and has been in use in traditional databases even before blockchain technology was introduced. Partitioning the data in the database into numerous smaller pieces and distributing them to various servers for storage is the idea. In this manner, a huge number of data access requests in a short amount of time won't cause a server overload issue. Up until now, shuddering has been seen to be the most workable way to scale blockchain systems horizontally. In order to summarize various techniques and suggest new benchmarks, some academics have presented their own sharding mechanisms at the same time that certain surveys have been published. Guo et al. [27] introduced a sharding technique that improves consensus protocols and shard generation, thereby considerably increasing system scalability and performance. The first sharding blockchain solution that supports a scalable cryptocurrency with a central bank-controlled money supply and mintette-verified transactions is called RSCoin [28]. In order to improve shard security and lower the danger of a blockchain failure, Zhang et al. proposed a unique sharding model that distributes nodes according to trust levels [29]. PYRAMID, a multilayer sharding scheme introduced by Hong et al., greatly increases transaction performance and scalability by enabling nodes with superior hardware to participate in numerous shards [30].

Prioritized Sharding, or P-Sharding, was established by Rahman [31]. This technique improves Blockchain scalability by assigning nodes a performance-based priority. Throughput of the system, data accessibility, and response times are all greatly enhanced by this method. Authors [32] went deeper into the characteristics of sharded distributed ledgers, emphasizing the necessity of concise proofs of legitimate state updates and the possibility of scalability in the face of an adversary that adapts to the system over time. Building on this work, [32] defined consistency and scalability in sharded blockchains and examined the characteristics of well-known sharded blockchains.

Furthermore, Harpum[33] talked about sharding as a first-layer approach to blockchain scalability, stressing the split of the network into groups to handle various transactions and outlining the advantages and disadvantages of currently available sharding-based solutions. A scalable three-dimensional design is suggested by Bez et al. [34], who also stress that the only ways to increase horizontal scalability are by isolating data and reaching consensus.

Many studies concentrate on comprehensive sharding, or sharding for transaction verification, storage, and communication, in an effort to significantly reduce the overhead of nodes in the blockchain. However, cross-shard transactions become a barrier with complete sharding, necessitating cross-shard protocols. The first fully functional sharding blockchain technology is Omniledger [35]. It uses a client-driven cross-shard transaction method. A client first requests proofs from every input shard before sending these proofs to every output shard in order to commit a UTXO-based transaction. The commitment of transactions will fail and other shards will roll back the transaction if any shards refuse to give proof for a transaction. Together, these studies advance our knowledge of and ability to create sharding scalability solutions for blockchain technology.

IV. SHARDING APPROACHES

The number of shards in sharding technology increases as blockchain processing power increases. That is to say, the more processing power added to the network, the more transactions that can be handled concurrently in parallel, and the network's overall transaction speed will grow linearly for independent transactions (i.e., inputs and outputs are in the same shard). There are various sharding strategies, each with advantages and things to keep in mind.

A. Stateless vs. Stateful sharding

Prophet [36] serves as an example of stateless sharding, which prioritizes conflict-free transaction processing by establishing a global order for cross-shard transactions. On the other hand, stateful sharding as demonstrated by Wormhole [37] focuses on the safe and dynamic division of participants among several shards in order to solve the problem of load balancing in permissionless blockchains. Partitioning the system state to lessen cross-shard transactions is known as state sharding, and it is a crucial approach for blockchain scalability [38]. Traffic-aware sharding, which reduces the memory footprint of the data mapping to shards, can be used to do this. Stateful sharding seeks to strike a compromise between operability metrics and self-balancing, whereas stateless sharding places more emphasis on deterministic ordering to remove conflicts. A resource allocation problem that takes into account both stateless and stateful functions has been developed in the context of serverless computing, enabling applications to modify their mode of operation for optimal performance [39]. In the field of blockchain sharding, a new method for sharding smart contracts has been presented, which maximizes parallelism by utilizing ownership and commutativity analysis.

B. Network sharding vs. Transaction sharding

Network sharding and transaction sharding are two key approaches in blockchain sharding technology [40]. In order to improve scalability and performance, a technique known as network sharding involves splitting the network into smaller segments and emphasizing consensus mechanisms inside these slices. The strong connectivity among blocks necessitates that miners communicate with one another in order to verify the validity of a newly added block. While this can guarantee transaction accuracy, it also exacerbates the non-scalability issues with the blockchain structure. Sharding the blockchain network is hence the initial stage of sharding, with the goal of reducing inter-network traffic. On-chain transactions are managed by each shard. Each group of miners is given a different task for independent verification after they are randomly assigned to groups.

In order to increase performance and scalability in blockchain systems, a technique called transaction sharding divides transaction processing among several node clusters, or "shards." Several methods have been put out to improve transaction sharding. One approach is to use lockless transactions, which guarantee transaction isolation without the need for locks and increase throughput and concurrency. An alternative method, known as SecurShard, improves fault tolerance and efficiency by introducing a hierarchical fault detection architecture that looks for potentially erroneous blocks during transaction processing as opposed to after they are added to the blockchain [41]. Furthermore, Haechi, a

Authorized licensed use limited to: Chiang Mai University provided by UniNet. Downloaded on September 18,2025 at 05:34:15 UTC from IEEE Xplore. Restrictions apply.

revolutionary cross-shard protocol, ensures high consistency among shards and finalization fairness, hence successfully enabling popular smart contracts and addressing security challenges linked to transaction ordering manipulations [42]. Together, these studies advance the continuing research and development of sharding techniques, each of which provides a special way to improve blockchain performance.

C. Vertical vs Horizontal Sharding

Vertical sharding involves partitioning data based on features or attributes, while horizontal sharding divides data across multiple nodes or servers [43]. Vertical fragmentation is a technique used in distributed databases to spread data according to columns. It improves query performance but may result in long response times. Conversely, horizontal sharding, as shown in sharding blockchain systems, aims to promote decentralization, security, and scalability by dynamically partitioning nodes into subsets for functions like as processing and storage without requiring fine-grained synchronization [44]. As an example, consider Elasticsearch, where sharding lowers latency and increases throughput. In the context of distributed systems, sharding techniques such as horizontal data splitting are employed to improve data processing efficiency, scalability, and performance [45]. In a variety of distributed computing scenarios, both vertical and horizontal sharding are essential for maximizing data distribution and system performance.

V. BENEFITS AND ISSUES OF SHARDING

In blockchain systems, sharding has various advantages. By breaking up validators into smaller groups (called shards), it improves concurrency and increases throughput linearly with the number of shards [46]. Additionally, by parallelizing the ledger protocol and lowering shard consensus overhead, sharding increases scalability [47]. It also improves performance and scalability by spreading transaction processing expenses over several node clusters [48]. With the addition of new shards, sharding reduces the issue of forks and low transaction processing rates in blockchain networks, which leads to a notable decrease in orphan blocks and fork probability [49]. To balance node performance across shards and increase system throughput, sharding algorithms based on performance models such as TOPSIS are employed [50]. Zhang [51] presents a community-based sharding approach that clusters transactional communities to lower transaction prices.

Sharding is a scalability-enhancing strategy in blockchain systems that comes with a number of issues related to security, cross-shard communication, and scalability [52]. Because several shards may be able to access the same account at the same time, conflicts and aborts are frequently caused by the independent and unpredictable scheduling of cross-shard transactions [53]. In order to resolve this, deterministic ordering is essential in order to create a global transaction order prior to processing, with the goal of removing inconsistencies and guaranteeing seamless transaction execution [54]. As evidenced by research, these problems must be resolved if sharded blockchain systems are to function more effectively. To handle multi-state dependency in contract calls, for example, Meepo solutions offer strategies to increase cross-shard efficiency [55]. For more effective cross-shard database services, GriDB offers an off-chain cross-shard mechanism [56]. Moreover, Prophet offers a blockchain with conflict-free sharding that eliminates disputes in cross-shard transactions through Byzantine-tolerant deterministic ordering [57]. Through creative solutions, these sharded blockchain systems hope to address issues with cross-shard communication, shard synchronization, and data availability.

VI. SHARDING IMPLEMENTATION TECHNIQUES

A. Shard Design and Partitioning Strategies

Implementing sharding in blockchain networks requires careful consideration of partitioning techniques and shard design. They decide how each shard is allocated the overall workload for data and transaction processing. Numerous studies have examined the application of sharding techniques, emphasizing partitioning and shard design strategies. Venkateswaran [58] put forth a straightforward technique that does away with the requirement for virtual shards, and Costa [59] stressed the significance of using hash partitioning to distribute data equally among nodes in a database cluster. A method called consistent hashing is used to spread data among a group of partitions, or shards, so as to reduce the number of keys that must be rehashed when the number of partitions changes. A reasonably even distribution of data is ensured by assigning a shard to each data item based on its hash value. Consistent hashing can be used in blockchain sharding to allocate user accounts, smart contracts, or transactions to particular shards according to their hash values or identifiers. By distributing data uniformly among shards, this method lessens hotspots and enhances scalability.

Range partitioning is another one process of breaking up the data into non-overlapping ranges and allocating a particular shard to each range. When the data has a natural ordering, like a timestamp or numerical value, this method is especially helpful. Range partitioning is a technique used by Zilliqa to distribute the transaction processing workload among its shards, with each shard in charge of handling transactions falling within a particular range of block numbers [60].

Topology-based partitioning in blockchain sharding allows transactions or nodes to be assigned to shards according to their network connectivity or geographical location. By using this method, communication latency should be reduced and network performance should be enhanced overall. When partitioning data or workload among shards, topology-based partitioning considers the topology or structure of the network. In order to maximize shard assignment, this method takes into account variables like geographic location, communication latency, and network proximity [61].

B. Consensus mechanisms for sharded networks

Sharded networks require consensus mechanisms to guarantee agreement on the state of every shard and the network as a whole. The Proof of Stake (PoS) consensus mechanism selects validators based on the quantity of cryptocurrency they possess and are prepared to "stake" as collateral when creating and validating new blocks [62]. By giving validators, a stake in the network and matching their interests with its success, it seeks to establish consensus. In the PoS protocol let,

$\boldsymbol{N}$ be the total number of validators in the network.
$\boldsymbol{S_i}$ be the stake held by validator $\boldsymbol{i}$
$\boldsymbol{T}$ be the total stake in the network ($\boldsymbol{T} = \sum_{i=1}^{N} \boldsymbol{S_i}$)

Authorized licensed use limited to: Chiang Mai University provided by UniNet. Downloaded on September 18,2025 at 05:34:15 UTC from IEEE Xplore. Restrictions apply.

$\boldsymbol{P_i}$ be the probability of validator $\boldsymbol{i}$ being chosen to validate the next block, which is proportional to their stake ($\boldsymbol{P_i} = \frac{S_i}{T}$)

The probability $\boldsymbol{P_i}$ can be used to determine the likelihood of validator $\boldsymbol{i}$ being chosen to create the next block. Validators with higher stakes have a higher chance of being selected, but the protocol aims to introduce randomness to prevent a monopoly by a few large stakeholders. Verifiable random functions (VRFs) [63] or pseudorandom functions are commonly used in the selection process to choose validators according to their probabilities. Since validators have pledged their own cryptocurrency as collateral, they have an incentive to act honourably and verify transactions with accuracy. The risk of losing staked assets exists for validators who engage in malicious behaviour or try to validate fraudulent transactions.

Scalability, security, and efficiency of blockchain systems are largely dependent on consensus mechanisms for sharded networks. To overcome the difficulties in reaching consensus in sharded networks, several strategies have been put forth. New consensus protocols that prioritize strong consensus and are resistant to attacks that impede progress, such as MWPoW+, are one strategy that addresses this problem [64]. Furthermore, to improve scalability and decentralization in consortium blockchains, models such as GT-NRSM incorporate trustworthy node selection strategies and dual-leaders supervision mechanisms [65]. These novel consensus techniques open the door for sharded blockchain networks to operate in a more secure and effective manner.

C. Cross-shard communication protocols

In a sharded blockchain network, coordination and communication between various shards are made possible by cross-shard communication protocols [66]. Using a two-step procedure that involves sending messages between shards and then finalizing the messages after they are received is one popular method. Enumerated below are some mathematical equations and a simplified summary:

1. Sending Messages Between Shards: Shard coordinators or other approved routing mechanisms receive transactions or messages that need to be sent from one shard (let's call it Shard A) to another shard (let's call it Shard B). Based on the recipient's address or another identifier, the routing mechanism determines the message's destination shard. After that, the message is routed to the relevant shard.

2. Finalizing Messages: The message is validated and executed after it arrives at the destination shard (Shard B). As soon as the message has been validated, the shard certifies its validity by creating an acknowledgment or receipt. To complete the transaction, this receipt is then returned to the original shard (Shard A). We can express this process mathematically as follows: Let $\boldsymbol{T_{AB}}$ be the transaction or message sent from Shard A to Shard B. Let $\boldsymbol{C_A}$ be the coordinator or routing mechanism in Shard A Let $\boldsymbol{C_B}$ be the coordinator or routing mechanism in Shard B. Let $\boldsymbol{R_B}$ be the receipt or acknowledgment generated by Shard B.

This is one way to depict the process:

1.Sending Messages Between Shards:

$$\boldsymbol{T_{AB}} = \boldsymbol{C_A} \rightarrow \boldsymbol{C_B} \tag{3}$$

2.Finalizing Messages:

$$\boldsymbol{R_B} = \boldsymbol{ValidateandExecute}(\boldsymbol{T_{AB}})$$

$$\boldsymbol{R_{AB}} = \boldsymbol{R_B} \rightarrow \boldsymbol{C_B} \rightarrow \boldsymbol{C_A} \tag{4}$$

where,

$\boldsymbol{T_{AB}}$ represents the message sent from Shard A to Shard B

$\boldsymbol{R_B}$ represents the receipt generated by Shard B.

$\boldsymbol{R_{AB}}$ represents the finalized receipt sent back to Shard A.

This methodology facilitates effective inter-shard communication and permits transactions to operate seamlessly between various divisions within the sharded blockchain network.

VII. CASE STUDIES AND REAL WORLD IMPLEMENTATIONS

A. Ethereum 2.0

Sharding is the method used by Ethereum 2.0 (Eth2) to address scalability issues. Eth2's first phase, called the Beacon Chain, aims to improve security without sacrificing performance [67]. In order to increase throughput, blockchain protocols such as Eth2 use sharding, which divides validators into smaller committees [68]. Effective sharding implementation necessitates managing concurrent transactions that modify the same state component; this problem is solved by tools such as CoSplit, which maximize parallel processing with negligible overhead [69]. Furthermore, sharding can be dynamically modified to maintain the fundamentals of blockchain technology while optimizing resource usage and scalability by balancing local and global shards [70].

There are multiple phases to the Ethereum 2.0 roadmap, and each one brings new features and improvements. The main phases of Ethereum 2.0 include:

Phase 0: Beacon Chain- Ethereum 2.0 is supported via the Beacon Chain, which went live in December 2020. It administers the validator registry and presents the proof-of-stake (PoS) consensus method [71].

Phase 1: Shard Chains- The goal of Phase 1 is to integrate shard chains into the Ethereum network. By handling transactions and smart contracts separately, these shard chains will function in tandem with the Beacon Chain to provide horizontal scalability.

Phase 1.5: Merge - In this phase, proof-of-work (PoW) consensus will give way to proof-of-success (PoS) consensus, and Ethereum 1.0 will become Ethereum 2.0 through the integration of the Ethereum mainnet with the Beacon Chain.

Phase 2: State Execution- The goal of Phase 2 is to completely develop state execution capabilities for shard chains. This will make it possible for smart contracts to run on shard chains, hence increasing efficiency and scalability.

Ethereum 2.0 is still being developed, with numerous teams and researchers focusing on various areas of the update. The next phases are currently in development and will be released gradually when they are finished and tested, but Phase 0 has already been made available. Ultimately, the sharding plan and Ethereum 2.0 address many of the network's scalability issues while also improving security and sustainability, marking a major advancement in the Ethereum blockchain's history.

B. Zilliqa

Zilliqa uses sharding to improve scalability while taking security trade-offs into account, as do other blockchain platforms such as Harmony and Elastico. Splitting nodes into

Authorized licensed use limited to: Chiang Mai University provided by UniNet. Downloaded on September 18,2025 at 05:34:15 UTC from IEEE Xplore. Restrictions apply.

smaller groups in order to parallelize ledger protocols and increase performance by lowering shard consensus overhead is known as sharding in blockchain networks such as Zilliqa. As demonstrated by the Transformers sharding protocol, creative solutions such as fine-grained account allocation and community-aware partition algorithms are put forth to overcome issues like high cross-shard transaction ratios and workload imbalances. Furthermore, Zilliqa's sharding protocol is a component of an all-encompassing strategy to increase transaction throughput at scale, leveraging efficient shard formation protocols, improvements to the Byzantine consensus protocol, and a distributed transaction protocol that guarantees safety and liveness even in the presence of malevolent transaction coordinators.

The blockchain network of Zilliqa is split up into N shards. A portion of the overall transaction load is handled by each shard. Let T represent the total number of transactions handled by the network as a whole. Every transaction is split equally between the shards. Assuming N shards, the average number of transactions processed by each shard can be represented as Transactions per Shard=T/N.

To maintain consistency across related shards, Zilliqa employs a cooperative cross-shard consensus technique based on inter-shard collaboration via collective signatures. With Zilliqa delivering up to 3.2 times improvement over previous works, handling approximately 3821 transactions per second across 20 shards, this method greatly increases transaction throughput. In general, Zilliqa's sharding architecture maximizes scalability and throughput, particularly in situations when there are a lot of cross-shard transactions.

Zilliqa has found a useful use in the field of digital advertising, where efficiency and scalability are essential because of the large number of transactions associated with ad placements, payments, and analytics. Faster transaction processing is made possible by Zilliqa's sharding technology, which is advantageous for real-time bidding and ad transaction settlement. In order to offer a more comprehensive analysis of transaction throughput, let's build a transaction

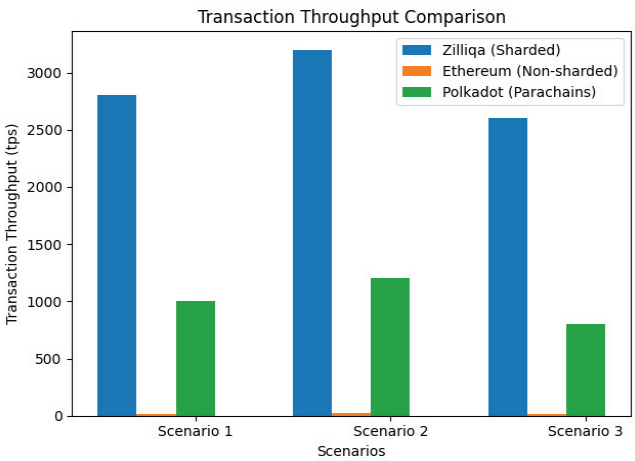

Fig. 3. Transaction Throughput Comparison Graph

throughput comparison graph with several values comparing Zilliqa (ZIL) to other blockchain platforms. For a thorough examination, we'll incorporate Zilliqa, Ethereum, and further blockchain.

Here, Zilliqa (Sharded): Shows how transaction throughput varies in various scenarios. Zilliqa's sharded architecture enables high throughput, which, depending on demand and network conditions, can vary from 2600 to 3200 transactions per second (tps). Ethereum (Non-sharded): Displays a transaction throughput of 12 to 20 tps, which is significantly lower. Ethereum's scalability is limited by its non-sharded nature when transaction loads are large. Another blockchain network that uses parachains for a different kind of scalability is called Polkadot (Parachains). Polkadot uses parallel chains to execute transactions concurrently, enabling transaction throughput ranging from 800 to 1200 tps.

VIII. FUTURE DIRECTIONS AND RESEARCH CHALLENGES

Blockchain networks can benefit from sharding as a scalable solution, but to fully realize its potential, a number of research issues and future paths must be resolved. The goals of future research on sharding, a blockchain network scaling solution, are to improve the scalability, applicability, and reliability of current methods. By permitting concurrent transaction validation and block creation, sharding attempts to increase blockchain scalability. In sharded blockchain systems, challenges include security, scalability, and cross-shard communication.

To attain optimal system performance and manage substantial workloads, research endeavors are directed on enhancing consensus methods, throughput, and shard formation. Subsequent research endeavors ought to tackle unresolved concerns, like refining sharding strategies according to blockchain varieties and augmenting transaction security when malevolent entities are present. Through examination and assessment of state-of-the-art sharding techniques, scholars can facilitate the development of blockchain networks that are more scalable and efficient.

Enhancing blockchain security and scalability is the goal of advanced sharding approaches. Innovative methods optimize node allocation and enhance shard reliability by taking into account variables including shard trust, communication latency, and node count variations. Certain techniques utilize the safety-liveness dichotomy of sharding to dynamically modify shard parameters for maximum effectiveness according to the corruption ratio of the system. By dividing nodes into subsets, sharding techniques reduce overhead in shard consensus and address scalability and performance difficulties. Sharding-based blockchain systems can be made more scalable by optimizing the fault tolerance ratio, cross-shard transactions, and shard trust in addition to improving security and decreasing transaction latency. In order to further enhance the security and performance characteristics of sharding blockchain systems, future research directions include investigating security breaches, performance issues, and creating novel architectures.

To sum up, sharding presents blockchain networks with potential scaling benefits, but in order to fully realize its potential and guarantee the stability, security, and decentralization of sharded blockchain ecosystems, it is imperative to tackle the research problems and future directions that have been mentioned. The development of sharding as a revolutionary approach to blockchain scalability will be fueled by ongoing interdisciplinary cooperation and innovation.

Authorized licensed use limited to: Chiang Mai University provided by UniNet. Downloaded on September 18,2025 at 05:34:15 UTC from IEEE Xplore. Restrictions apply.

IX. CONCLUSION

This study aims to address the major scalability issues that prevent the mainstream use of blockchain technology for large-scale applications. Specifically, we have investigated sharding as a possible scalability solution for blockchain networks. A major obstacle has been the scalability of blockchain, despite the fact that its decentralized and irreversible nature has revolutionized several industries. In this paper, we have covered the fundamental ideas of sharding, emphasizing its main ideas and tactics. The benefits of sharding, such as increased throughput, decreased latency, and better scalability, were investigated. We did, however, also discuss the difficulties that come with sharding. In addition, we examined actual blockchain network sharding implementations and experimental outcomes, demonstrating the practical efficacy of this technique. Case studies of Ethereum 2.0 and Zilliqa platforms show the real advantages of sharding in terms of increasing blockchain performance and scalability.

REFERENCES

[1] Sheth, Harsh, and Janvi Dattani. "Overview of blockchain technology." Asian Journal For Convergence In Technology (AJCT) ISSN-2350-1146 (2019).

[2] Torre, Dominique and Sothearath Seang. “Proof of Work and Proof of Stake Consensus Protocols: A Blockchain Application for Local Complementary Currencies.” (2019).

[3] Zheng, Zibin, et al. "An overview of blockchain technology: Architecture, consensus, and future trends." 2017 IEEE international congress on big data (BigData congress). Ieee, 2017.

[4] Mermer, Gültekin Berahan, Engin Zeydan, and Suayb Sb Arslan. "An overview of blockchain technologies: principles, opportunities and challenges." 2018 26th signal processing and communications applications conference (SIU). IEEE, 2018.

[5] Laroiya, Chetna, Deepika Saxena, and C. Komalavalli. "Applications of blockchain technology." Handbook of research on blockchain technology. Academic press, 2020. 213-243.

[6] Singh, Ankita et al. “Blockchain Technology in Cryptocurrency: A Review.” 2022 International Conference on Machine Learning, Big Data, Cloud and Parallel Computing (COM-IT-CON) 1 (2022): 715-719.

[7] Khan, Dodo et al. “Systematic Literature Review of Challenges in Blockchain Scalability.” Applied Sciences (2021): n. pag.

[8] Ademi, Edin. “A Comprehensive Study on the Scalability Challenges of the Blockchain Technology.” (2018).

[9] Gong, Fanshu, et al. "An Overview of Blockchain Scalability for Storage." 2023 26th International Conference on Computer Supported Cooperative Work in Design (CSCWD). IEEE, 2023.

[10] Zhou, Qiheng, et al. "Overview to Blockchain Scalability Challenges and Solutions." Blockchain Scalability. Singapore: Springer Nature Singapore, 2023. 51-80.

[11] Buterin, Vitalik. "Ethereum: platform review." Opportunities and challenges for private and consortium blockchains 45 (2016).

[12] Slepak, Greg, and Anya Petrova. "The DCS theorem." arXiv preprint arXiv:1801.04335 (2018).

[13] Chu, Shumo, and Sophia Wang. "The curses of blockchain decentralization." arXiv preprint arXiv:1810.02937 (2018).

[14] Buterin, Vitalik. "Why sharding is great: demystifying the technical properties." Vitalik. ca (2021).

[15] Gopalan, Aditya, et al. "Stability and scalability of blockchain systems." Proceedings of the ACM on Measurement and Analysis of Computing Systems 4.2 (2020): 1-35.

[16] Viktoria, Gromova, and Borysenko Pavlo. "USING SHARDING TO IMPROVE BLOCKCHAIN NETWORK SCALABILITY." System technologies 6.143 (2022): 17-27.

[17] Liu, Xinmeng, et al. "A survey on blockchain sharding." ISA transactions 141 (2023): 30-43.

[18] Adhikari, Ramesh, and Costas Busch. "Lockless blockchain sharding with multiversion control." International Colloquium on Structural Information and Communication Complexity. Cham: Springer Nature Switzerland, 2023.

[19] Vinodha, K., et al. "Sharding in Blockchain Systems: Concepts and Challenges." 2022 International Conference on Smart Generation Computing, Communication and Networking (SMART GENCON). IEEE, 2022.

[20] Liu, Yizhong, et al. "Building blocks of sharding blockchain systems: Concepts, approaches, and open problems." Computer Science Review 46 (2022): 100513.

[21] Duan, Tingting, et al. "Sharded blockchain architecture oriented to multilateral collaboration of source-grid-load-storage." 2023 IEEE International Conference on Control, Electronics and Computer Technology (ICCECT). IEEE, 2023.

[22] Ramburn, Tirathraj, and Dhrubajyoti Goswami. "SecurShard: A Model for Hierarchical Fault Detection in Blockchain Sharding." 2023 IEEE International Conference on Blockchain and Cryptocurrency (ICBC). IEEE, 2023.

[23] Liu, Jun, et al. "Research on Sharding Strategy of Blockchain Based on TOPSIS." International Conference on Smart Computing and Communication. Cham: Springer Nature Switzerland, 2022.

[24] Swathi, P. Study and Analysis of Scalability, Interoperability and Transition Difficulty in Permissioned Blockchain. Diss. Doctoral Dissertation, National Institute of Technology, Surathkal, Karnataka, 2022.

[25] Hemati, Mozhdeh, and Mehdi Shajari. "An incentive compatible reward sharing approach for shard-based blockchains." 2021 29th Iranian Conference on Electrical Engineering (ICEE). IEEE, 2021.

[26] Venkateswaran, Narayanan, and Suvamoy Changder. "Simplified data partitioning in a consistent hashing based sharding implementation." TENCON 2017-2017 IEEE Region 10 Conference. IEEE, 2017.

[27] Mei, Xin Su, et al. "Research on blockchain scalability based on sharding strategy." Fifth International Conference on Computer Information Science and Artificial Intelligence (CISAI 2022). Vol. 12566. SPIE, 2023.

[28] Danezis, George, and Sarah Meiklejohn. "Centrally banked cryptocurrencies." arXiv preprint arXiv:1505.06895 (2015).

[29] Zhang, PeiYun, et al. "Optimized blockchain sharding model based on node trust and allocation." IEEE Transactions on Network and Service Management (2023).

[30] Hong, Zicong, Song Guo, and Peng Li. "Scaling blockchain via layered sharding." IEEE Journal on Selected Areas in Communications 40.12 (2022): 3575-3588

[31] Rahman, Fahad, et al. "Scalable Blockchain Through Prioritised Sharding." 2023 6th International Conference on Advanced Communication Technologies and Networking (CommNet). IEEE, 2023.

[32] Avarikioti, Georgia, Eleftherios Kokoris-Kogias, and Roger Wattenhofer. "Divide and scale: Formalization of distributed ledger sharding protocols." arXiv e-prints (2019): arXiv-1910.

[33] Hong, Zicong, Song Guo, and Peng Li. "Scaling blockchain via layered sharding." IEEE Journal on Selected Areas in Communications 40.12 (2022): 3575-3588.

[34] Bez, Mirko, Giacomo Fornari, and Tullio Vardanega. "The scalability challenge of ethereum: An initial quantitative analysis." 2019 IEEE International Conference on Service-Oriented System Engineering (SOSE). IEEE, 2019.

[35] Kokoris-Kogias, Eleftherios, et al. "Omniledger: A secure, scale-out, decentralized ledger via sharding." 2018 IEEE symposium on security and privacy (SP). IEEE, 2018.

[36] Han, Runchao, Jiangshan Yu, and Ren Zhang. "Analysing and improving shard allocation protocols for sharded blockchains." Proceedings of the 4th ACM Conference on Advances in Financial Technologies. 2022.

[37] Hong, Zicong, et al. "Prophet: Conflict-Free Sharding Blockchain via Byzantine-Tolerant Deterministic Ordering." IEEE INFOCOM 2023-IEEE Conference on Computer Communications. IEEE, 2023.

[38] Dotan, Maya, et al. "Survey on blockchain networking: Context, state-of-the-art, challenges." ACM Computing Surveys (CSUR) 54.5 (2021): 1-34.

[39] Puliafito, Carlo, et al. "Stateless or stateful FaaS? I'll take both!." 2022 IEEE International Conference on Smart Computing (SMARTCOMP). IEEE, 2022.

Authorized licensed use limited to: Chiang Mai University provided by UniNet. Downloaded on September 18,2025 at 05:34:15 UTC from IEEE Xplore. Restrictions apply.

[40] Adhikari, Ramesh, and Costas Busch. "Lockless blockchain sharding with multiversion control." International Colloquium on Structural Information and Communication Complexity. Cham: Springer Nature Switzerland, 2023.

[41] Ramburn, Tirathraj, and Dhrubajyoti Goswami. "SecurShard: A Model for Hierarchical Fault Detection in Blockchain Sharding." 2023 IEEE International Conference on Blockchain and Cryptocurrency (ICBC). IEEE, 2023.

[42] Francesca, Vidotto. "Lockless Blockchain Sharding with Multiversion Control." Lecture Notes in Computer Science, null (2023).:112-131. doi: 10.1007/978-3-031-32733-9_6

[43] Zhang, Zhifang, and Liyang Zhou. "A vertical-horizontal framework for building rack-aware regenerating codes." IEEE Transactions on Information Theory 69.5 (2023): 2874-2885.

[44] Abdelhafiz, Bahaa Mahmoud. "Distributed database using sharding database architecture." 2020 IEEE Asia-Pacific Conference on Computer Science and Data Engineering (CSDE). IEEE, 2020.

[45] Liu, Yizhong, et al. "Building blocks of sharding blockchain systems: Concepts, approaches, and open problems." Computer Science Review 46 (2022): 100513.

[46] Ramburn, Tirathraj, and Dhrubajyoti Goswami. "SecurShard: A Model for Hierarchical Fault Detection in Blockchain Sharding." 2023 IEEE International Conference on Blockchain and Cryptocurrency (ICBC). IEEE, 2023.

[47] David, Bernardo, et al. "Gearbox: Optimal-size shard committees by leveraging the safety-liveness dichotomy." Proceedings of the 2022 ACM SIGSAC Conference on Computer and Communications Security. 2022.

[48] Francesca, Vidotto. (2023). Lockless Blockchain Sharding with Multiversion Control. Lecture Notes in Computer Science, doi: 10.1007/978-3-031-32733-9_6

[49] Reza, Nourmohammadi., Kai-Jun, Zhang. (2022). Sharding and Its Impact on Fork Probability. doi: 10.1109/iGETblockchain56591.2022.10087122.

[50] Liu, Jun, et al. "Research on Sharding Strategy of Blockchain Based on TOPSIS." International Conference on Smart Computing and Communication. Cham: Springer Nature Switzerland, 2022.

[51] Zhang, Zixu, et al. "A Community-based Strategy for Blockchain Sharding: Enabling More Budget-friendly Transactions." 2023 IEEE International Conference on Blockchain (Blockchain). IEEE, 2023.

[52] Vinodha, K., et al. "Sharding in Blockchain Systems: Concepts and Challenges." 2022 International Conference on Smart Generation Computing, Communication and Networking (SMART GENCON). IEEE, 2022.

[53] Nourmohammadi, Reza, and Kaiwen Zhang. "Sharding and its impact on fork probability." 2022 IEEE 1st Global Emerging Technology Blockchain Forum: Blockchain & Beyond (iGETblockchain). IEEE, 2022.

[54] Kale, D. R., & Aparadh, S. Y. (2016). A Study of a detection and elimination of data inconsistency in data integration. International Journal of Scientific Research in Science, Engineering and Technology, 2(1), 532-535.

[55] Zheng, Peilin, et al. "Sharding-Based Scalable Consortium Blockchain." Blockchain Scalability. Singapore: Springer Nature Singapore, 2023. 119-141.

[56] Zicong, Hong., Song, Guo., Enyuan, Zhou., Wuhui, Chen., Huawei, Huang., Albert, Y., Zomaya. (2023). GriDB: Scaling Blockchain Database via Sharding and Off-Chain Cross-Shard Mechanism. Proceedings of The Vldb Endowment, doi: 10.14778/3587136.3587143

[57] Zicong, Hong., Song, Guo., Enyuan, Zhou., Jianting, Zhang., Wuhui, Chen., Jin, Liang., Jie, Zhang., Albert, Y., Zomaya. (2023). Prophet: Conflict-Free Sharding Blockchain via Byzantine-Tolerant Deterministic Ordering. arXiv.org, doi: 10.48550/arXiv.2304.08595

[58] Venkateswaran, Narayanan, and Suvamoy Changder. "Simplified data partitioning in a consistent hashing based sharding implementation." TENCON 2017-2017 IEEE Region 10 Conference. IEEE, 2017.

[59] Costa, Caio H., P. H. M. Maia, and F. Carlos. "Sharding by hash partitioning." Proceedings of the 17th International Conference on Enterprise Information Systems. Vol. 1. 2015.

[60] RAHMAN, NURUL NADIA BINTI ABDOL. "ZCHAIN4U BASED ON BLOCKCHAIN TECHNOLOGY." (2018).

[61] Wang, Han, et al. "A physical topology for optimizing partition tolerance in consortium blockchains to reach CAP guarantee bound." Transactions on Emerging Telecommunications Technologies 34.9 (2023): e4820.

[62] Matsunaga, Takeaki et al. "An Incentivization Mechanism with Validator Voting Profile in Proof-of-Stake-Based Blockchain." IEICE Trans. Commun. 105-B (2022): 228-239.

[63] Buser, Maxime, et al. "Post-quantum verifiable random function from symmetric primitives in pos blockchain." European Symposium on Research in Computer Security. Cham: Springer International Publishing, 2022.

[64] Yibin, Xu., Jia-Jung, Shao., Tijs, Slaats., Boris, Dudder. (2023). MWPoW+: A Strong Consensus Protocol for Intra-Shard Consensus in Blockchain Sharding. ACM Transactions on Internet Technology, doi: 10.1145/3584020

[65] Shen, Tao, et al. "GT-NRSM: efficient and scalable sharding consensus mechanism for consortium blockchain." The Journal of Supercomputing 79.17 (2023): 20041-20075.

[66] Zhang, Jianting, et al. "Front-running attack in distributed sharded ledgers and fair cross-shard consensus." arXiv preprint arXiv:2306.06299 (2023).

[67] Yuechen, Tao., Bo, Li., Jingjie, Jiang., Hok, Chu, Ng., Cong, Wang., Baochun, Li. (2020). On Sharding Open Blockchains with Smart Contracts. doi: 10.1109/ICDE48307.2020.00121

[68] Mikel, Cortes-Goicoechea., Luca, Franceschini., Leonardo, Bautista-Gomez. (2020). Resource Analysis of Ethereum 2.0 Clients. arXiv: Cryptography and Security.

[69] George, Pîrlea., Amrit, Kumar., Ilya, Sergey. (2021). Practical smart contract sharding with ownership and commutativity analysis. doi: 10.1145/3453483.3454112

[70] Era, Johri., Debashree, Sarkar., Khusbu, Shah., Mansi, Mota. (2019). Addressing Scalability and Storage issues in Block Chain using Sharding. Social Science Research Network, doi: 10.2139/SSRN.3446547

[71] Sagar, Vaibhav, and Praveen Kaushik. "Ethereum 2.0 blockchain in healthcare and healthcare based internet-of-things devices." Proceedings of the International Conference on Paradigms of Computing, Communication and Data Sciences: PCCDS 2020. Springer Singapore, 2021.

Authorized licensed use limited to: Chiang Mai University provided by UniNet. Downloaded on September 18,2025 at 05:34:15 UTC from IEEE Xplore. Restrictions apply.