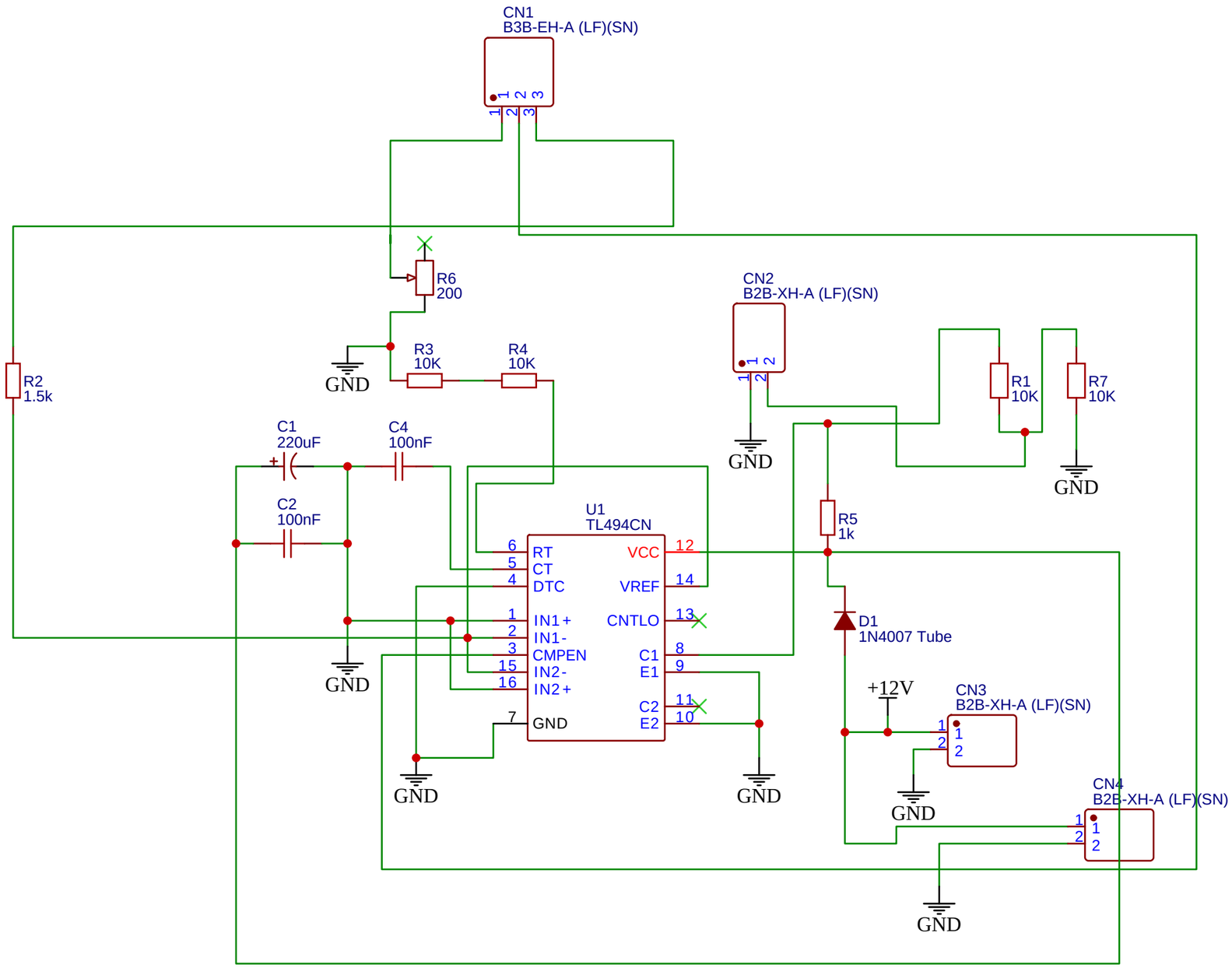

TITLE: Voltage_regulator		REV: 1.2
EasyEDA	Company: Ibis medical	Sheet: 1/1
	Date: 2022-05-06 Drawn By: Aban Varghese	