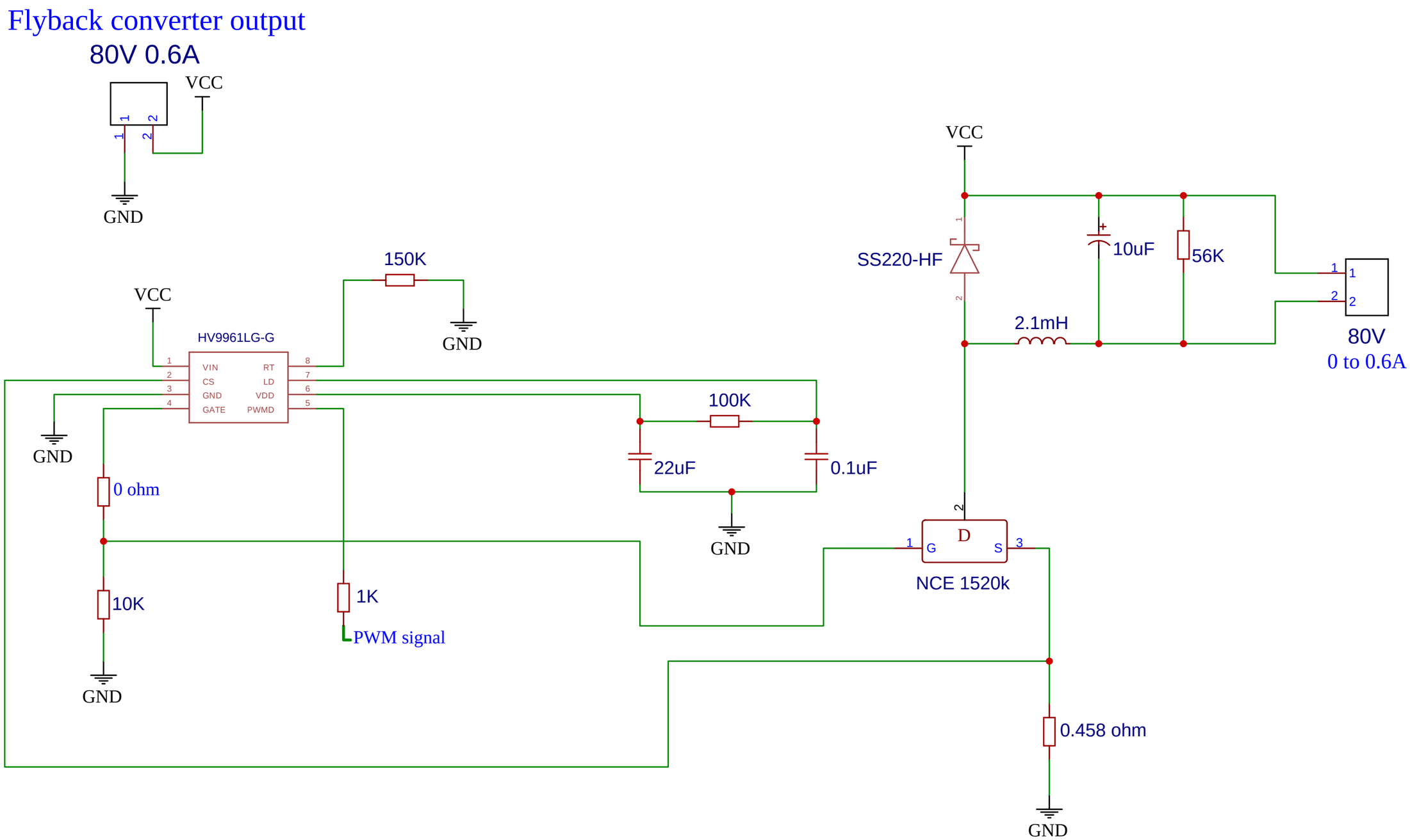

TITLE: LED Driver		REV: 1.0
EasyEDA	Company: Ibis medical	Sheet: 1/1
	Date: 17-04-2020 Drawn By: aban varghese	