1 Homework sheet 3 - Extensive form games, subgame perfect equilibrium and repeated games

1. Obtain the Nash equilibrium for the following games using backward induction:

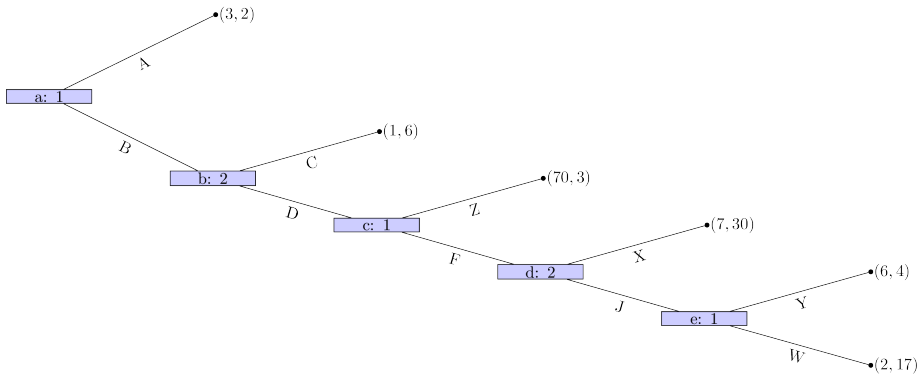

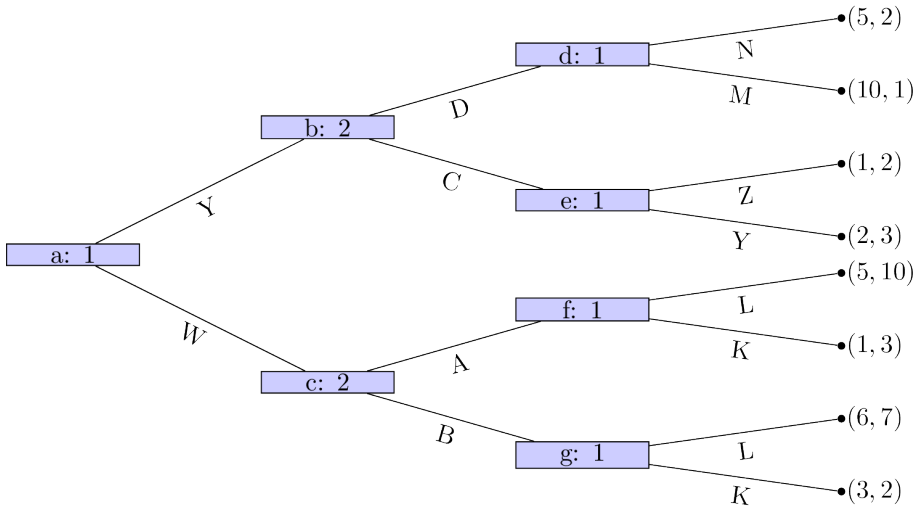

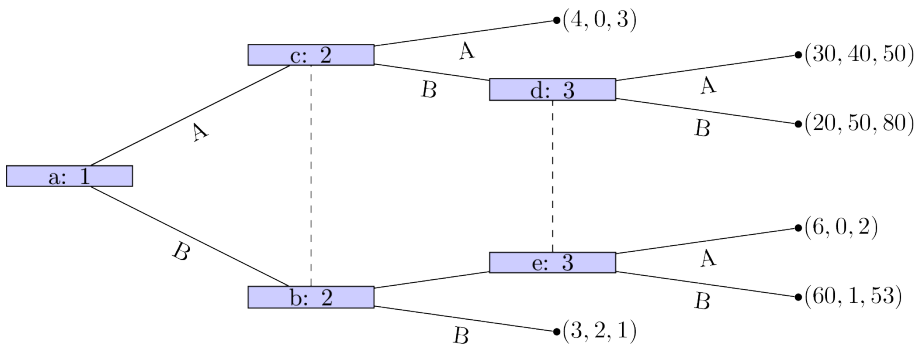

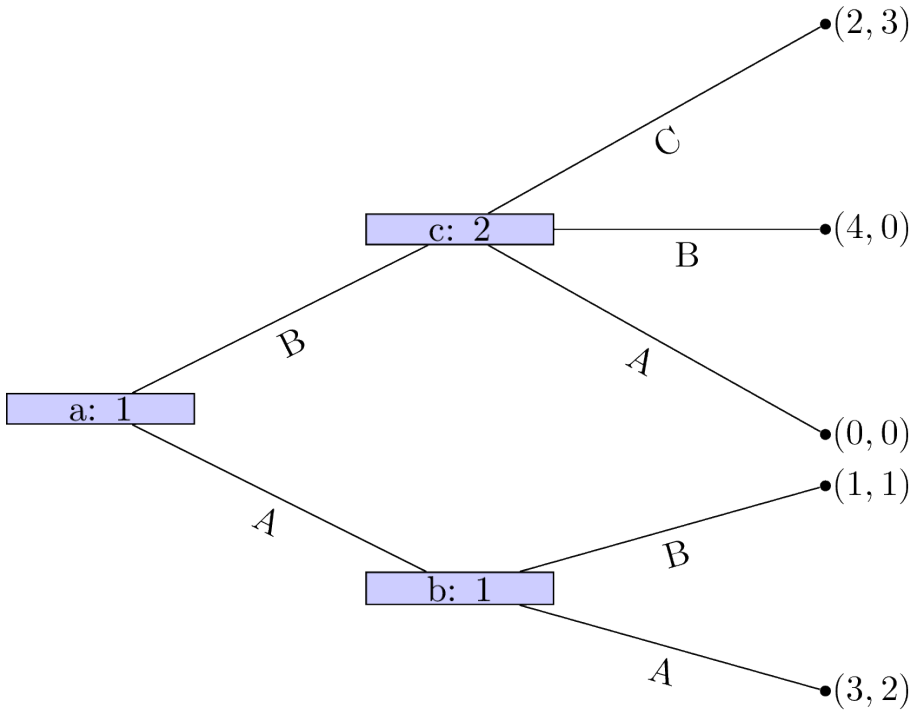

2. Obtain the Nash equilibrium for the following game:

Player 1 chooses a number $x \geq 0$, which player 2 observes. After this simulataneously and independatly player 1 and player 2 choose $y_2, y_1 \in \mathbb{R}$ respectively. The utility to player 1 is given by $2y_2y_1 + xy_1 - y_1^2 - x^3/3$ and the utility to player 2 is given by $-(y_1 - 2y_2)^2$.

3. For each of the following games:

i. Identify all subgames.
ii. Identify the corresponding normal form representations and hence obtain all Nash equilibrium.

iii. Identify which Nash equilibrium are also subgame perfect Nash equilibrium.

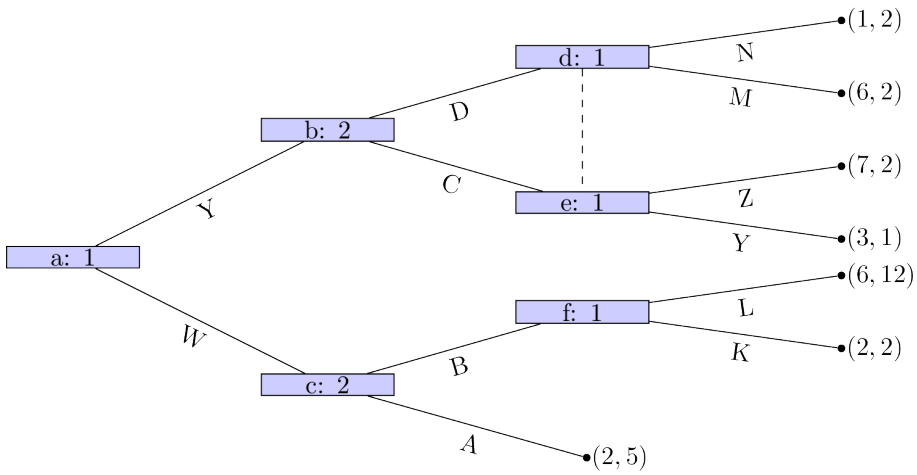

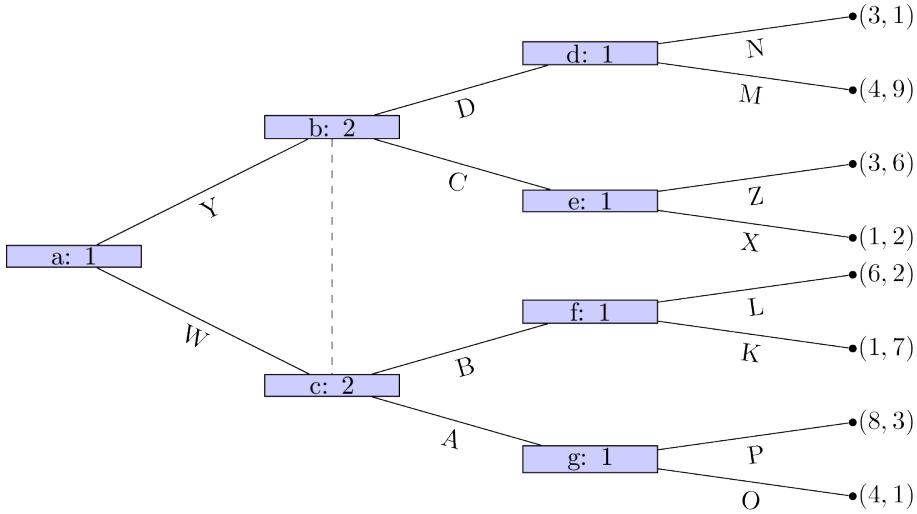

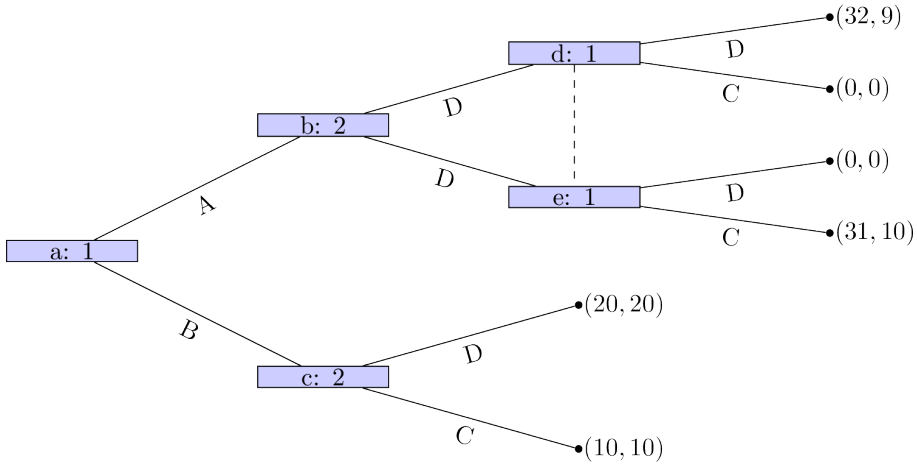

4. Consider the game in exercise 3 of homework sheet 2. Assume that the vendors now position themselves sequentially. Model the game in extensive form and find the subgame perfect Nash equilibrium. 5. For the following stage games:

i. Plot all possible utility pairs for $T = 2$;
ii. Recalling that subgame perfect equilibrium for the repeated game must play a stage Nash equilibrium in the final stage attempt to identify a Nash equilibrium for the repeated game that is not a sequence of stage Nash profiles.

$$\begin{pmatrix} (4,3) & (7,6) \\ (1,1) & (4,3) \end{pmatrix}$$

$$\begin{pmatrix} (-1,1) & (3,-7) \\ (-2,6) & (2,2) \end{pmatrix}$$

$$\begin{pmatrix} (5,2) & (2,0) & (6,3) \\ (5,2) & (1,3) & (7,1) \end{pmatrix}$$

6. Consider the following stage game:

$$\begin{pmatrix} (-1,1) & (3,-7) \\ (-2,6) & (2,2) \end{pmatrix}$$

i. For $\delta = 1/3$ obtain the utilities for the infinitely repeated game for the strategies S_D: "play the first strategy throughout" and S_C: "play the second strategy throughout".

ii. Plot the space of feasible average payoffs and the space of individually rational payoffs.

iii. Obtain δ that ensures that a strategy profile exists that would give a subgame perfect Nash equilibrium with average payoffs: $(3/2, 3/2)$, $(0, 3)$, $(2, 6)$ and $(2, 0)$.