REVIEW QUESTIONS

1. What is the only set of input conditions that will produce a HIGH output from a three-input NOR gate?
2. Determine the output level in Figure 3-24 for $A = B = 1$, $C = D = 0$.
3. Change the NOR gate of Figure 3-24 to a NAND gate, and change the NAND to a NOR. What is the new expression for x?

3-10 BOOLEAN THEOREMS

We have seen how Boolean algebra can be used to help analyze a logic circuit and express its operation mathematically. We will continue our study of Boolean algebra by investigating the various **Boolean theorems** (rules) that can help us to simplify logic expressions and logic circuits. The first group of theorems is given in Figure 3-25. In each theorem, x is a logic variable that can be either a 0 or a 1. Each theorem is accompanied by a logic-circuit diagram that demonstrates its validity.

FIGURE 3-25 Single-variable theorems

(1) $x \cdot 0 = 0$

(2) $x \cdot 1 = x$

(3) $x \cdot x = x$

(4) $x \cdot \bar{x} = 0$

(5) $x + 0 = x$

(6) $x + 1 = 1$

(7) $x + x = x$

(8) $x + \bar{x} = 1$

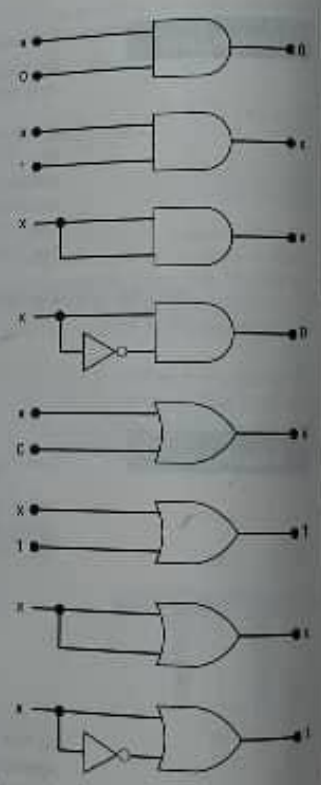

Theorem (1) states that if any variable is ANDed with 0, the result must be 0. This is easy to remember because the AND operation is just like ordinary multiplication, where we know that anything multiplied by 0 is 0. We also know that the output of an AND gate will be 0 whenever any input is 0, regardless of the level on the other input.

26 March 2024 14:08

Theorem (2) is also obvious by comparison with ordinary multiplication.

Theorem (3) can be proved by trying each case. If $x = 0$, then $0 \cdot 0 = 0$; if $x = 1$, then $1 \cdot 1 = 1$. Thus, $x \cdot x = x$.

Theorem (4) can be proved in the same manner. However, it can also be reasoned that at any time either x or its inverse $\bar{x}$ must be at the 0 level, and so their AND product always must be 0.

Theorem (5) is straightforward, since 0 *added* to anything does not affect its value, either in regular addition or in OR addition.

Theorem (6) states that if any variable is ORed with 1, the result will always be 1. We check this for both values of x: $0 + 1 = 1$ and $1 + 1 = 1$. Equivalently, we can remember that an OR gate output will be 1 when *any* input is 1, regardless of the value of the other input.

Theorem (7) can be proved by checking for both values of x: $0 \cdot 0 = 0$ and $1 \cdot 1 = 1$.

Theorem (8) can be proved similarly, or we can just reason that at any time either x or $\bar{x}$ must be at the 1 level so that we are always ORing a 0 and a 1, which always results in 1.

Before introducing any more theorems, we should point out that when theorems (1) through (8) are applied, the variable x may actually represent an expression containing more than one variable. For example, if we have $A\bar{B}(\overline{AB})$, we can invoke theorem (4) by letting $x = AB$. Thus, we can say that $A\bar{B}(\overline{AB}) = 0$. The same idea can be applied to the use of any of these theorems.

Multivariable Theorems

The theorems presented below involve more than one variable:

(9)	$x + y = y + x$
(10)	$x \cdot y = y \cdot x$
(11)	$x + (y + z) = (x + y) + z = x + y + z$
(12)	$x(yz) = (xy)z = xyz$
(13*a*)	$x(y + z) = xy + xz$
(13*b*)	$(w + x)(y + z) = wy + xy + wz + xz$
(14)	$x + xy = x$
(15*a*)	$x + \bar{x}y = x + y$
(15*b*)	$\bar{x} + xy = \bar{x} + y$

Theorems (9) and (10) are called the *commutative laws*. These laws indicate that the order in which we OR or AND two variables is unimportant; the result is the same.

Theorems (11) and (12) are the *associative laws*, which state that we can group the variables in an AND expression or OR expression any way we want.

Theorem (13) is the *distributive law*, which states that an expression can be expanded by multiplying term by term just the same as in ordinary algebra. This theorem also indicates that we can factor an expression. That is, if we have a sum of two (or more) terms, each of which contains a common variable, the common variable can be factored out just as in ordinary algebra. For example, if we have the expression $A\bar{B}C + ABC$, we can factor out the B variable:

$$A\bar{B}C + ABC = B(A\bar{C} + AC)$$

As another example, consider the expression $ABC + ABD$. Here the two terms have the variables A and B in common, and so $A \cdot B$ can be factored out of both terms. That is,

$$ABC + ABD = AB(C + D)$$

26 March 2024 14:08

Theorems (9) to (13) are easy to remember and use because they are identical to those of ordinary algebra. Theorems (14) and (15), on the other hand, do not have any counterparts in ordinary algebra. Each can be proved by trying all possible cases for x and y. This is illustrated for theorem (14) as follows:

Case 1. For $x = 0, y = 0$,

$$\begin{aligned} x + xy &= x \\ 0 + 0 \cdot 0 &= 0 \\ 0 &= 0 \end{aligned}$$

Case 2. For $x = 0, y = 1$,

$$\begin{aligned} x + xy &= x \\ 0 + 0 \cdot 1 &= 0 \\ 0 + 0 &= 0 \\ 0 &= 0 \end{aligned}$$

Case 3. For $x = 1, y = 0$,

$$\begin{aligned} x + xy &= x \\ 1 + 1 \cdot 0 &= 1 \\ 1 + 0 &= 1 \\ 1 &= 1 \end{aligned}$$

Case 4. For $x = 1, y = 1$,

$$\begin{aligned} x + xy &= x \\ 1 + 1 \cdot 1 &= 1 \\ 1 + 1 &= 1 \\ 1 &= 1 \end{aligned}$$

Theorem (14) can also be proved by factoring and using theorems (6) and (2) as follows:

$$\begin{aligned} x + xy &= x(1 + y) \\ &= x \cdot 1 && \text{[using theorem (6)]} \\ &= x && \text{[using theorem (2)]} \end{aligned}$$

All of these Boolean theorems can be useful in simplifying a logic expression—that is, in reducing the number of terms in the expression. When this is done, the reduced expression will produce a circuit that is less complex than the one that the original expression would have produced. A good portion of the next chapter will be devoted to the process of circuit simplification. For now, the following examples will serve to illustrate how the Boolean theorems can be applied.

EXAMPLE 3-13

Simplify the expression $y = A\bar{B}D + A\bar{B}\bar{D}$.

Solution

Factor out the common variables $A\bar{B}$ using theorem (13):

$$y = A\bar{B}(D + \bar{D})$$

26 March 2024 14:09

Using theorem (8), the term in parentheses is equivalent to 1. Thus,

$$\begin{aligned} y &= AB \cdot 1 \\ &= AB \quad \text{[using theorem (2)]} \end{aligned}$$

EXAMPLE 3-14

Simplify $z = (\overline{A} + B)(A + B)$.

Solution

The expression can be expanded by multiplying out the terms [theorem (13)]:

$$z = \overline{A} \cdot A + \overline{A} \cdot B + B \cdot A + B \cdot B$$

Invoking theorem (4), the term $\overline{A} \cdot A = 0$. Also, $B \cdot B = B$ [theorem (3)]

$$z = 0 + \overline{A} \cdot B + B \cdot A + B = \overline{A}B + AB + B$$

Factoring out the variable B [theorem (13)], we have

$$z = B(\overline{A} + A + 1)$$

Finally, using theorems (2) and (6),

$$z = B$$

EXAMPLE 3-15

Simplify $x = ACD + ABCD$.

Solution

Factoring out the common variables CD, we have

$$x = CD(A + \overline{A}B)$$

Utilizing theorem (15a), we can replace $A + \overline{A}B$ by $A + B$, so

$$\begin{aligned} x &= CD(A + B) \\ &= ACD + BCD \end{aligned}$$

REVIEW QUESTIONS

1. Use theorems (13) and (14) to simplify $y = A\overline{C} + AB\overline{C}$.
2. Use theorems (13) and (8) to simplify $y = \overline{A}BCD + \overline{A}BCD$.
3. Use theorems (13) and (15b) to simplify $y = AD + ABD$.

3-11 DEMORGAN'S THEOREMS

Two of the most important theorems of Boolean algebra were contributed by a great mathematician named DeMorgan. **DeMorgan's theorems** are extremely useful in simplifying expressions in which a product or sum of variables is inverted. The two theorems are:

$$(16) \quad \overline{(x + y)} = \overline{x} \cdot \overline{y}$$
$$(17) \quad \overline{(x \cdot y)} = \overline{x} + \overline{y}$$

26 March 2024 14:09

Theorem (16) says that when the OR sum of two variables is inverted, this is the same as inverting each variable individually and then ANDing these inverted variables. Theorem (17) says that when the AND product of two variables is inverted, it is the same as inverting each variable individually and then ORing them. Each of DeMorgan's theorems can readily be proven by checking for all possible combinations of x and y. This will be left as an end of chapter exercise.

Although these theorems have been stated in terms of single variables x and y, they are equally valid for situations where x and/or y are expressions that contain more than one variable. For example, let's apply them to the expression $(\overline{A\overline{B}} + C)$ as shown below:

$$\overline{(A\overline{B} + C)} = \overline{(A\overline{B})} \cdot \overline{C}$$

Note that we used theorem (16) and treated $A\overline{B}$ as x and C as y. The result can be further simplified because we have a product $A\overline{B}$ that is inverted. Using theorem (17), the expression becomes

$$\overline{A\overline{B}} \cdot \overline{C} = (\overline{A} + \overline{\overline{B}}) \cdot \overline{C}$$

Notice that we can replace $\overline{\overline{B}}$ by B, so that we finally have

$$(\overline{A} + B) \cdot \overline{C} = \overline{A}\,\overline{C} + B\overline{C}$$

This final result contains only inverter signs that invert a single variable.

EXAMPLE 3-16

Simplify the expression $z = (\overline{A + C}) \cdot (\overline{B + \overline{D}})$ to one having only single variables inverted.

Solution

Using theorem (17), and treating $(\overline{A} + C)$ as x and $(B + \overline{D})$ as y, we have

$$z = \overline{(\overline{A} + C)} + \overline{(B + \overline{D})}$$

We can think of this as breaking the large inverter sign down the middle and changing the AND sign ($\cdot$) to an OR sign ($+$). Now the term $(\overline{A} + C)$ can be simplified by applying theorem (16). Likewise, $(B + \overline{D})$ can be simplified.

$$\begin{aligned} z &= \overline{(\overline{A} + C)} + \overline{(B + \overline{D})} \\ &= (\overline{\overline{A}} \cdot \overline{C}) + \overline{B} \cdot \overline{\overline{D}} \end{aligned}$$

Here we have broken the larger inverter signs down the middle and replaced the ($+$) with a ($\cdot$). Canceling out the double inversions, we have finally

$$z = A\overline{C} + \overline{B}D$$

Example 3-16 points out that when using DeMorgan's theorems to reduce an expression, we may break an inverter sign at any point in the expression and change the operator sign at that point in the expression to its opposite ($+$ is changed to $\cdot$, and vice versa). This procedure is continued until the expression is reduced to one in which only single variables are inverted. Two more examples are given below.

FIGURE 3-2
circuits impl
(16); (b) alte
the NOR fun

26 March 2024 14:09

Example 1

$$\begin{aligned} x &= \overline{A + B \cdot C} \\ &= \overline{A} \cdot \overline{(B \cdot C)} \\ &= \overline{A} \cdot (\overline{B} + \overline{C}) \\ &= \overline{A} \cdot (\overline{B} + \overline{C}) \end{aligned}$$

Example 2

$$\begin{aligned} w &= \overline{(A + BC) \cdot (D + EF)} \\ &= \overline{(A + BC)} + \overline{(D + EF)} \\ &= (\overline{A} \cdot \overline{BC}) + \overline{D} \cdot \overline{EF} \\ &= [\overline{A} \cdot (\overline{B} + \overline{C})] + \overline{D} \cdot (\overline{E} + \overline{F}) \\ &= \overline{A}\,\overline{B} + \overline{A}\,\overline{C} + \overline{D}\,\overline{E} + \overline{D}\,\overline{F} \end{aligned}$$

DeMorgan's theorems are easily extended to more than two variables. For example, it can be proved that

$$\begin{aligned} \overline{x + y + z} &= \overline{x} \cdot \overline{y} \cdot \overline{z} \\ \overline{x \cdot y \cdot z} &= \overline{x} + \overline{y} + \overline{z} \end{aligned}$$

Here, we see that the large inverter sign is broken at *two* points in the expression and the operator sign is changed to its opposite. This can be extended to any number of variables. Again, realize that the variables can themselves be expressions rather than single variables. Here is another example

$$\begin{aligned} x &= \overline{\overline{AB} \cdot \overline{CD} \cdot \overline{EF}} \\ &= \overline{\overline{AB}} + \overline{\overline{CD}} + \overline{\overline{EF}} \\ &= AB + CD + EF \end{aligned}$$

Implications of DeMorgan's Theorems

Let us examine theorems (16) and (17) from the standpoint of logic circuits. First, consider theorem (16):

$$\overline{x + y} = \overline{x} \cdot \overline{y}$$

The left-hand side of the equation can be viewed as the output of a NOR gate whose inputs are x and y. The right-hand side of the equation, on the other hand, is the result of first inverting both x and y and then putting them through an AND gate. These two representations are equivalent and are illustrated in Figure 3-26(a). What this means is that an AND gate with INVERTERs on each of its inputs is equivalent to a NOR gate. In fact, both representations are used to represent the NOR function. When the AND gate with inverted inputs is used to represent the NOR function, it is usually drawn as shown in Figure 3-26(b), where the small circles on the inputs represent the inversion operation.

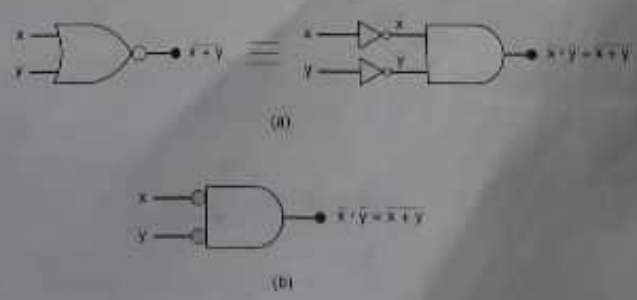

FIGURE 3-26 (a) Equivalent circuits implied by theorem (16); (b) alternative symbol for the NOR function.

26 March 2024 14:09

Now consider theorem (17):

$$x \cdot y = x + y$$

The left side of the equation can be implemented by a NAND gate with inputs x and y. The right side can be implemented by first inverting inputs x and y and then putting them through an OR gate. These two equivalent representations are shown in Figure 3-27(a). The OR gate with INVERTERs on each of its inputs is equivalent to the NAND gate. In fact, both representations are used to represent the NAND function. When the OR gate with inverted inputs is used to represent the NAND function, it is usually drawn as shown in Figure 3-27(b), where the circles again represent inversion.

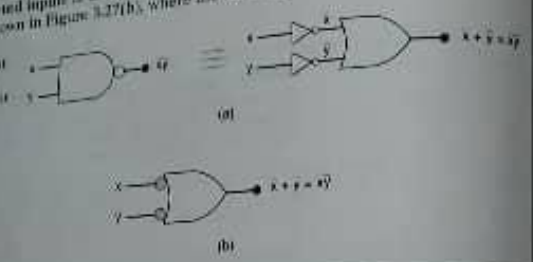

FIGURE 3-27 (a) Equivalent circuits implied by theorem (17); (b) alternative symbol for the NAND function.

EXAMPLE 3-17

Determine the output expression for the circuit of Figure 3-28 and simplify it using DeMorgan's theorems.

FIGURE 3-28 Example 3-17.

Solution

The expression for z is $z = \overline{ABC}$. Use DeMorgan's theorem to break the large inversion sign:

$$z = \overline{A} + \overline{B} + \overline{C}$$

Cancel the double inversions over C to obtain

$$z = \overline{A} + \overline{B} + C$$

REVIEW QUESTIONS

1. Use DeMorgan's theorems to convert the expression $z = \overline{(A + B) \cdot \overline{C}}$ to one that has only single-variable inversions.
2. Repeat question 1 for the expression $y = \overline{RST + \overline{Q}}$.
3. Implement a circuit having output expression $z = \overline{ABC}$ using only a NAND gate and an INVERTER.
4. Use DeMorgan's theorems to convert $y = \overline{A + \overline{B} + \overline{CD}}$ to an expression containing only single-variable inversions.

26 March 2024 14:09

3-12 UNIVERSALITY OF NAND GATES AND NOR GATES

All Boolean expressions consist of various combinations of the basic operations of OR, AND, and INVERT. Therefore, any expression can be implemented using combinations of OR gates, AND gates, and INVERTERs. It is possible, however, to implement any logic expression using *only* NAND gates and no other type of gate. This is because NAND gates, in the proper combination, can be used to perform each of the Boolean operations OR, AND, and INVERT. This is demonstrated in Figure 3-29.

First, in Figure 3-29(a), we have a two-input NAND gate whose inputs are purposely connected together so that the variable A is applied to both. In this configuration, the NAND simply acts as INVERTER because its output is $x = \overline{A \cdot A} = \overline{A}$.

In Figure 3-29(b), we have two NAND gates connected so that the AND operation is performed. NAND gate 2 is used as an INVERTER to change $\overline{AB}$ to $\overline{\overline{AB}} = AB$, which is the desired AND function.

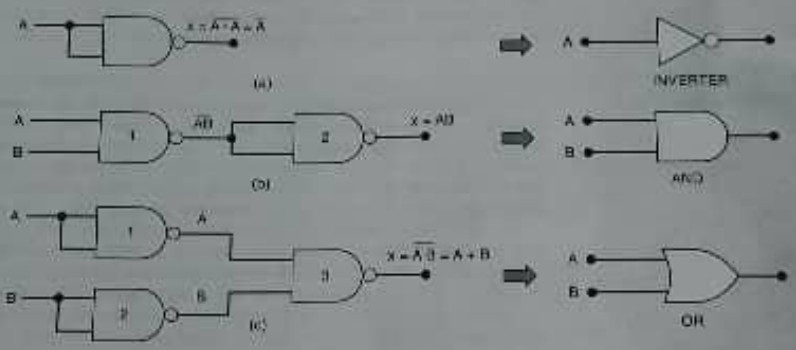

FIGURE 3-29 NAND gates can be used to implement any Boolean function.

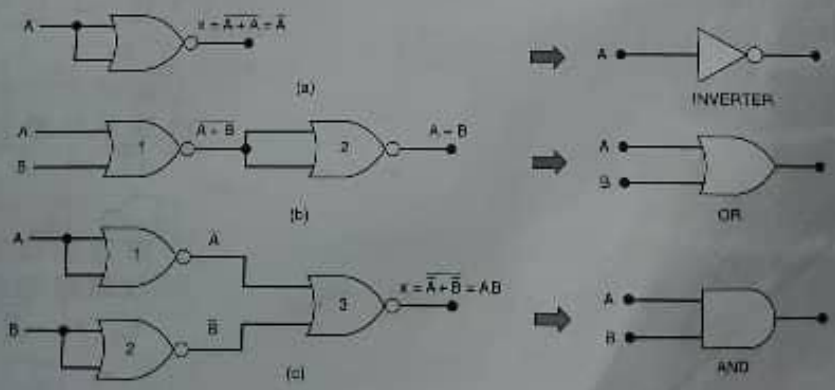

FIGURE 3-30 NOR gates can be used to implement any Boolean operation.

26 March 2024 14:09

CHAPTER 4

COMBINATIONAL LOGIC CIRCUITS

OBJECTIVES

Upon completion of this chapter, you will be able to:

- Convert a logic expression into a sum-of-products expression.
- Perform the necessary steps to reduce a sum-of-products expression to its simplest form.
- Use Boolean algebra and the Karnaugh map as tools to simplify and design logic circuits.
- Explain the operation of both exclusive-OR and exclusive-NOR circuits.
- Design simple logic circuits without the help of a truth table.
- Implement enable circuits.

INTRODUCTION

In Chapter 3, we studied the operation of all the basic logic gates, and we used Boolean algebra to describe and analyze circuits that were made up of combinations of logic gates. These circuits can be classified as *combinational* logic circuits because, at any time, the logic level at the output depends on the combination of logic levels present at the inputs. A combinational circuit has no *memory* characteristic, so its output depends *only* on the current value of its inputs.

In this chapter, we will continue our study of combinational circuits. To start, we will go further into the simplification of logic circuits. Two methods will be used: one uses Boolean algebra theorems; the other uses a *mapping* technique. In addition, we will study simple techniques for designing combinational logic circuits to satisfy a given set of requirements. A complete study of logic-circuit design is not one of our objectives, but the methods we introduce will provide a good introduction to logic design.

26 March 2024 14:10

A good portion of the chapter is devoted to the troubleshooting of combinational circuits. This first exposure to troubleshooting should begin to develop the type of analytical skills needed for successful troubleshooting. To make this material as practical as possible, we will first present some of the basic characteristics of logic-gate ICs in the TTL and CMOS logic families along with a description of the most common types of faults encountered in digital IC circuits.

In the last sections of this chapter, we will extend our knowledge of programmable logic devices and hardware description languages. The concept of programmable hardware connections will be reinforced, and we will provide more details regarding the role of the development system. You will learn the steps followed in the design and development of digital systems today. Enough information will be provided to allow you to choose the correct types of data objects for use in simple projects to be presented later in this text. Finally, several control structures will be explained, along with some instruction regarding their appropriate use.

4-1 SUM-OF-PRODUCTS FORM

The methods of logic-circuit simplification and design that we will study require the logic expression to be in a **sum-of-products (SOP)** form. Some examples of this form are:

1. $ABC + \overline{ABC}$
2. $AB + \overline{ABC} + \overline{CD} + D$
3. $\overline{AB} + \overline{CD} + EF + GK + H\overline{L}$

Each of these sum-of-products expressions consists of two or more AND terms (products) that are ORed together. Each AND term consists of one or more variables *individually* appearing in either complemented or uncomplemented form. For example, in the sum-of-products expression $ABC + \overline{ABC}$, the first AND product contains the variables A, B, and C in their uncomplemented (not inverted) form. The second AND term contains A and C in their complemented (inverted) form. Note that in a sum-of-products expression, one inversion sign *cannot* cover more than one variable in a term (e.g., we cannot have $\overline{ABC}$ or $\overline{RST}$).

Product-of-Sums

Another general form for logic expressions is sometimes used in logic-circuit design. Called the **product-of-sums (POS)** form, it consists of two or more OR terms (sums) that are ANDed together. Each OR term contains one or more variables in complemented or uncomplemented form. Here are some product-of-sum expressions:

26 March 2024 14:10

1. $(A + B + C)(A + C)$
2. $(A + \bar{B})(C + D)E$
3. $(A + C)(B + \bar{D})(\bar{B} + C)(A + D + \bar{E})$

The methods of circuit simplification and design that we will be using are based on the sum-of-products (SOP) form, so we will not be doing much with the product-of-sums (POS) form. It will, however, occur from time to time in some logic circuits that have a particular structure.

1. Which of the following expressions is in SOP form?
   (a) $AB + CD + E$
   (b) $AB(C + D)$
   (c) $(A + B)(C + D + E)$
   (d) $\overline{MN} + PQ$
2. Repeat question 1 for the POS form.

4-2 SIMPLIFYING LOGIC CIRCUITS

Once the expression for a logic circuit has been obtained, we may be able to reduce it to a simpler form containing fewer terms or fewer variables in one or more terms. The new expression can then be used to implement a circuit that is equivalent to the original circuit but that contains fewer gates and connections.

To illustrate, the circuit of Figure 4-1(a) can be simplified to produce the circuit of Figure 4-1(b). Both circuits perform the same logic, so it should be obvious that the simpler circuit is more desirable because it contains fewer gates and will therefore be smaller and cheaper than the original. Furthermore, the circuit reliability will improve because there are fewer interconnections that can be potential circuit faults.

In subsequent sections, we will study two methods for simplifying logic circuits. One method will utilize the Boolean algebra theorems and, as we shall see,

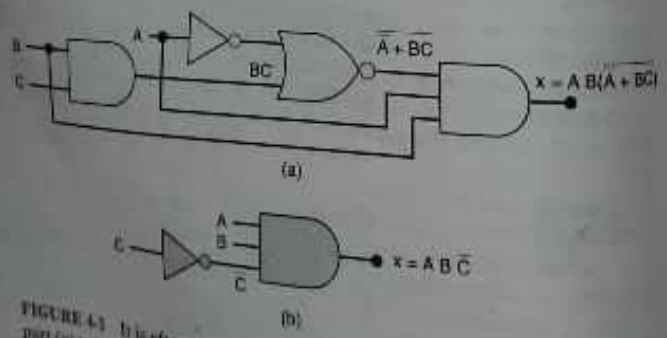

FIGURE 4-1 It is often possible to simplify a logic circuit such as that in part (a) to produce a more efficient implementation, shown in (b).

26 March 2024 14:11

is greatly dependent on inspiration and experience. The other method (Karnaugh mapping) is a systematic, step-by-step approach.

4-3 ALGEBRAIC SIMPLIFICATION

We can use the Boolean algebra theorems that we studied in Chapter 3 to help us simplify the expression for a logic circuit. Unfortunately, it is not always obvious which theorems should be applied to produce the simplest result. Furthermore, there is no easy way to tell whether the simplified expression is in its simplest form or whether it could have been simplified further. Thus, algebraic simplification often becomes a process of trial and error. With experience, however, one can become adept at obtaining reasonably good results.

The examples that follow will illustrate many of the ways in which the Boolean theorems can be applied in trying to simplify an expression. You should notice that these examples contain two essential steps:

1. The original expression is put into SOP form by repeated application of DeMorgan's theorems and multiplication of terms.
2. Once the original expression is in SOP form, the product terms are checked for common factors, and factoring is performed wherever possible. The factoring should result in the elimination of one or more terms.

LE 4-1

Simplify the logic circuit shown in Figure 4-2(a).

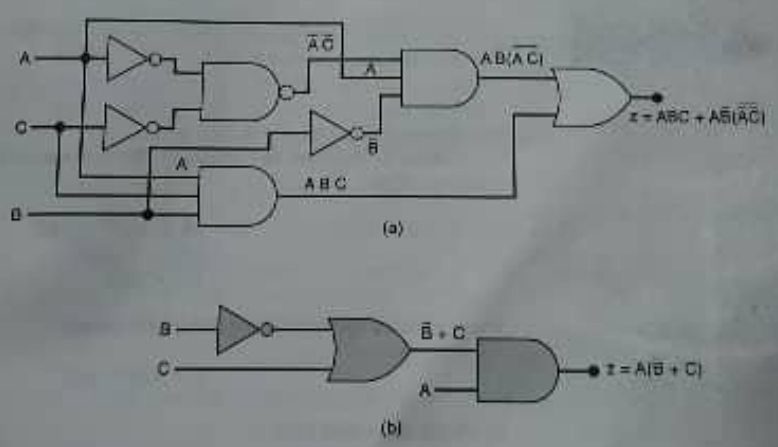

FIGURE 4-2 Example 4-1.

Solution

The first step is to determine the expression for the output using the method presented in Section 3-6. The result is

$$z = ABC + A\overline{B}\cdot(\overline{\overline{A}\,\overline{C}})$$

26 March 2024 14:11

Once the expression is determined, it is usually a good idea to break down all large inverter signs using DeMorgan's theorems and then multiply out all terms.

$$
\begin{aligned}
z &= ABC + A\bar{B}(\bar{A} + \bar{C}) && \text{[theorem (17)]} \\
&= ABC + A\bar{B}(A + C) && \text{[cancel double inversions]} \\
&= ABC + A\bar{B}A + A\bar{B}C && \text{[multiply out]} \\
&= ABC + A\bar{B} + A\bar{B}C && [A \cdot A = A]
\end{aligned}
$$

With the expression now in SOP form, we should look for common variables among the various terms with the intention of factoring. The first and third terms above have AC in common, which can be factored out:

$$z = AC(B + \bar{B}) + A\bar{B}$$

Since $B + \bar{B} = 1$, then

$$
\begin{aligned}
z &= AC(1) + A\bar{B} \\
&= AC + A\bar{B}
\end{aligned}
$$

We can now factor out A, which results in

$$z = A(C + \bar{B})$$

This result can be simplified no further. Its circuit implementation is shown in Figure 4-2(b). It is obvious that the circuit in Figure 4-2(b) is a great deal simpler than the original circuit in Figure 4-2(a).

4-2

Simplify the expression $z = A\bar{B}\bar{C} + A\bar{B}C + ABC$.

Solution

The expression is already in SOP form.

Method 1: The first two terms in the expression have the product $A\bar{B}$ in common. Thus,

$$
\begin{aligned}
z &= A\bar{B}(\bar{C} + C) + ABC \\
&= A\bar{B}(1) + ABC \\
&= A\bar{B} + ABC
\end{aligned}
$$

We can factor the variable A from both terms:

$$z = A(\bar{B} + BC)$$

Invoking theorem (15b):

$$z = A(\bar{B} + C)$$

Method 2: The original expression is $z = A\bar{B}\bar{C} + A\bar{B}C + ABC$. The first two terms have $A\bar{B}$ in common. The last two terms have AC in common. How do we know whether to factor $A\bar{B}$ from the first two terms or AC from the last two terms? Actually, we can do both by using the ABC term twice. In other words, we can rewrite the expression as:

26 March 2024 14:11

$$z = A\bar{B}C + ABC + A\bar{B}\bar{C} + ABC$$

where we have added an extra term $A\bar{B}C$. This is valid and will not change the value of the expression because $A\bar{B}C + A\bar{B}C = A\bar{B}C$ [theorem (7)]. Now we can factor $A\bar{B}$ from the first two terms and AC from the last two terms:

$$\begin{aligned} z &= A\bar{B}(C + \bar{C}) + AC(\bar{B} + B) \\ &= A\bar{B} \cdot 1 + AC \cdot 1 \\ &= A\bar{B} + AC = A(\bar{B} + C) \end{aligned}$$

Of course, this is the same result obtained with method 1. This trick of using the same term twice can always be used. In fact, the same term can be used more than twice if necessary.

EXAMPLE 4-3

Simplify $z = AC(\overline{\bar{A}BD}) + ABCD + A\bar{B}C$.

Solution

First, use DeMorgan's theorem on the first term:

$$z = AC(A + \bar{B} + \bar{D}) + ABCD + A\bar{B}C \qquad \text{(step 1)}$$

Multiplying out yields

$$z = ACA + AC\bar{B} + A\bar{C}\bar{D} + \bar{A}\bar{B}\bar{C}\bar{D} + ABC \qquad (2)$$

Because $\bar{A} \cdot A = 0$, the first term is eliminated:

$$z = AC\bar{B} + A\bar{C}\bar{D} + \bar{A}\bar{B}\bar{C}\bar{D} + ABC \qquad (3)$$

This is the desired SOP form. Now we must look for common factors among the various product terms. The idea is to check for the largest common factor between any two or more product terms. For example, the first and last terms have the common factor BC, and the second and third terms share the common factor $\bar{A}\bar{D}$. We can factor these out as follows:

$$z = \bar{B}C(\bar{A} + A) + \bar{A}\bar{D}(C + \bar{B}\bar{C}) \qquad (4)$$

Now, because $\bar{A} + A = 1$, and $C + \bar{B}\bar{C} = C + \bar{B}$ [theorem (15a)], we have

$$z = \bar{B}C + \bar{A}\bar{D}(\bar{B} + C) \qquad (5)$$

This same result could have been reached with other choices for the factoring. For example, we could have factored C from the first, second, and fourth product terms in step 3 to obtain

$$z = C(\bar{A}\bar{B} + \bar{A}\bar{D} + A\bar{B}) + \bar{A}\bar{B}\bar{C}\bar{D}$$

The expression inside the parentheses can be factored further:

$$z = C(\bar{B}[A + \bar{A}] + \bar{A}\bar{D}) + \bar{A}\bar{B}\bar{C}\bar{D}$$

Because $\bar{A} + A = 1$, this becomes

$$z = C(\bar{B} + \bar{A}\bar{D}) + \bar{A}\bar{B}\bar{C}\bar{D}$$

Multiplying out yields

$$z = \bar{B}C + \bar{A}C\bar{D} + \bar{A}\bar{B}\bar{C}\bar{D}$$

Now we can factor $\bar{A}\bar{D}$ from the second and third terms to get

$$z = \bar{B}C + \bar{A}\bar{D}(C + \bar{B}\bar{C})$$

26 March 2024 14:11

If we use theorem (15a), the expression in parentheses becomes $B + C$. Thus we finally have

$$z = BC + \bar{A}D(B + C)$$

This is the same result that we obtained earlier, but it took us many more steps. This illustrates why you should look for the largest common factors; it will generally lead to the final expression in the fewest steps.

Example 4-3 illustrates the frustration often encountered in Boolean simplification. Because we have arrived at the same equation (which appears irreducible) by two different methods, it might seem reasonable to conclude that this final equation is the simplest form. In fact, the simplest form of this equation is

$$z = \bar{A}BD + BC$$

But there is no apparent way to reduce step (5) to reach this simpler version. In this case, we missed an operation earlier in the process that could have led to the simpler form. The question is, "How could we have known that we missed a step?" Later in this chapter, we will examine a mapping technique that will always lead to the simplest SOP form.

EXAMPLE 4-4

Simplify the expression $x = (A + B)(A + B + D)\bar{D}$.

Solution

The expression can be put into sum-of-products form by multiplying out all the terms. The result is

$$x = \bar{A}A\bar{D} + \bar{A}B\bar{D} + A\bar{D}\bar{D} + BA\bar{D} + BB\bar{D} + BD\bar{D}$$

The first term can be eliminated because $\bar{A}A = 0$. Likewise, the third and sixth terms can be eliminated because $D\bar{D} = 0$. The fifth term can be simplified to $B\bar{D}$ because $BB = B$. This gives us

$$x = \bar{A}B\bar{D} + AB\bar{D} + B\bar{D}$$

We can factor $B\bar{D}$ from each term to obtain

$$x = B\bar{D}(\bar{A} + A + 1)$$

Clearly, the term inside the parentheses is always 1, so we finally have

$$x = B\bar{D}$$

EXAMPLE 4-5

Simplify the circuit of Figure 4-3(a).

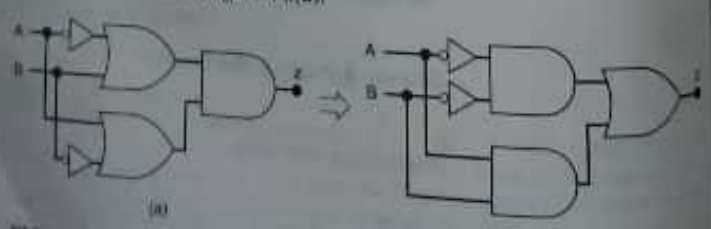

FIGURE 4-3 Example 4-5.

26 March 2024 14:11

Solution

The expression for output z is

$$z = (A + B)(A + \overline{B})$$

Multiplying out to get the sum-of-products form, we obtain

$$z = \overline{A}A + \overline{A}\overline{B} + BA + B\overline{B}$$

We can eliminate $\overline{A}A = 0$ and $B\overline{B} = 0$ to end up with

$$z = A\overline{B} + AB$$

This expression is implemented in Figure 4-3(b), and if we compare it with the original circuit, we see that both circuits contain the same number of gates and connections. In this case, the simplification process produced an equivalent, but not simpler, circuit.

PLE 4-6

Simplify $x = ABC + \overline{A}BD + \overline{C}\overline{D}$.

Solution

You can try, but you will not be able to simplify this expression any further.

UESTIONS

1. State which of the following expressions are *not* in the sum-of-products form:
   (a) $RST + RST + T$
   (b) $A\overline{D}C + \overline{A}DC$
   (c) $MN\overline{P} + (M + \overline{N})P$
   (d) $AB + \overline{A}B\overline{C} + A\overline{B}\overline{C}D$
2. Simplify the circuit in Figure 4-1(a) to arrive at the circuit of Figure 4-1(b).
3. Change each AND gate in Figure 4-1(a) to a NAND gate. Determine the new expression for x and simplify it.

4-4 DESIGNING COMBINATIONAL LOGIC CIRCUITS

When the desired output level of a logic circuit is given for all possible input conditions, the results can be conveniently displayed in a truth table. The Boolean expression for the required circuit can then be derived from the truth table. For example, consider Figure 4-4(a), where a truth table is shown for a circuit that has two inputs, A and B, and output x. The table shows that output x is to be at the 1 level *only* for the case where $A = 0$ and $B = 1$. It now remains to determine what logic circuit will produce this desired operation. It should be apparent that one possible solution is that shown in Figure 4-4(b). Here an AND gate is used with inputs $\overline{A}$ and B, so that $x = \overline{A} \cdot B$. Obviously x will be 1 *only if* both inputs to the AND gate are 1, namely, $\overline{A} = 1$ (which means that $A = 0$) and $B = 1$. For all other values of A and B, the output x will be 0.

26 March 2024 14:11