4-4 DESIGNING COMBINATIONAL LOGIC CIRCUITS

When the desired output level of a logic circuit is given for all possible input conditions, the results can be conveniently displayed in a truth table. The Boolean expression for the required circuit can then be derived from the truth table. For example, consider Figure 4-4(a), where a truth table is shown for a circuit that has two inputs, A and B, and output x. The table shows that output x is to be at the 1 level *only* for the case where $A = 0$ and $B = 1$. It now remains to determine what logic circuit will produce this desired operation. It should be apparent that one possible solution is that shown in Figure 4-4(b). Here an AND gate is used with inputs $\overline{A}$ and B, so that $x = \overline{A} \cdot B$. Obviously x will be 1 *only if* both inputs to the AND gate are 1, namely, $\overline{A} = 1$ (which means that $A = 0$) and $B = 1$. For all other values of A and B, the output x will be 0.

A	B	x
0	0	0
0	1	1
1	0	0
1	1	0

(a)

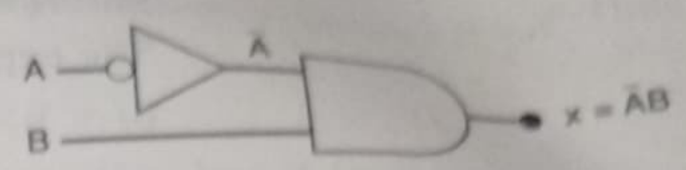

(b)

FIGURE 4-4 Circuit that produces a 1 output only for the $A = 0, B = 1$ condition.

A similar approach can be used for the other input conditions. For instance, if x were to be high only for the $A = 1, B = 0$ condition, the resulting circuit would be an AND gate with inputs A and $\bar{B}$. In other words, for any of the four possible input conditions, we can generate a high x output by using an AND gate with appropriate inputs to generate the required AND product. The four different cases are shown in Figure 4-5. Each of the AND gates shown generates an output that is 1 *only* for one given input condition and the output is 0 for all other conditions. It should be noted that the AND inputs are inverted or not inverted depending on the values that the variables have for the given condition. If the variable is 0 for the given condition, it is inverted before entering the AND gate.

Let us now consider the case shown in Figure 4-6(a), where we have a truth table that indicates that the output x is to be 1 for two different cases: $A = 0, B = 1$ and $A = 1, B = 0$. How can this be implemented? We know that the AND term $\bar{A} \cdot B$ will generate a 1 only for the $A = 0, B = 1$ condition, and the AND term $A \cdot \bar{B}$ will generate a 1 for the $A = 1, B = 0$ condition. Because

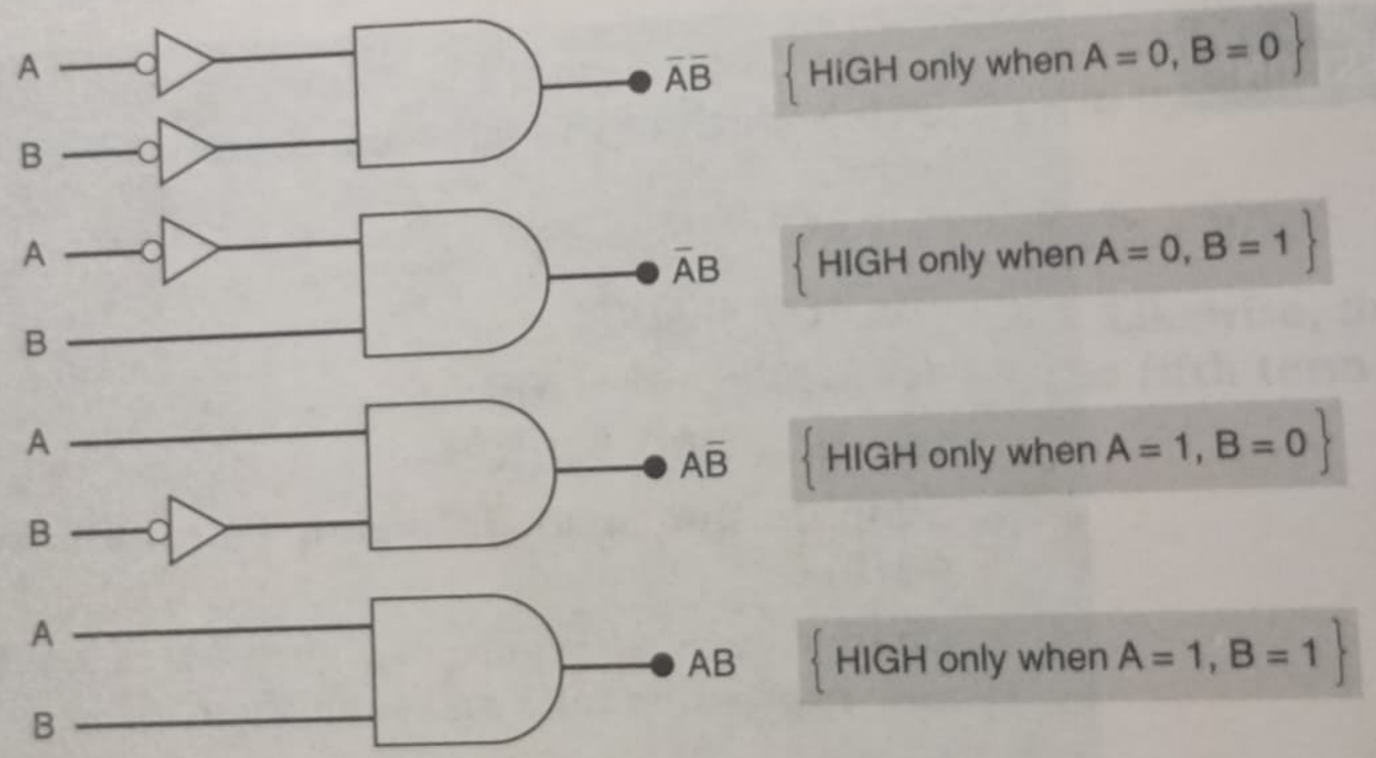

FIGURE 4-5 An AND gate with appropriate inputs can be used to produce a 1 output for a specific set of input levels.

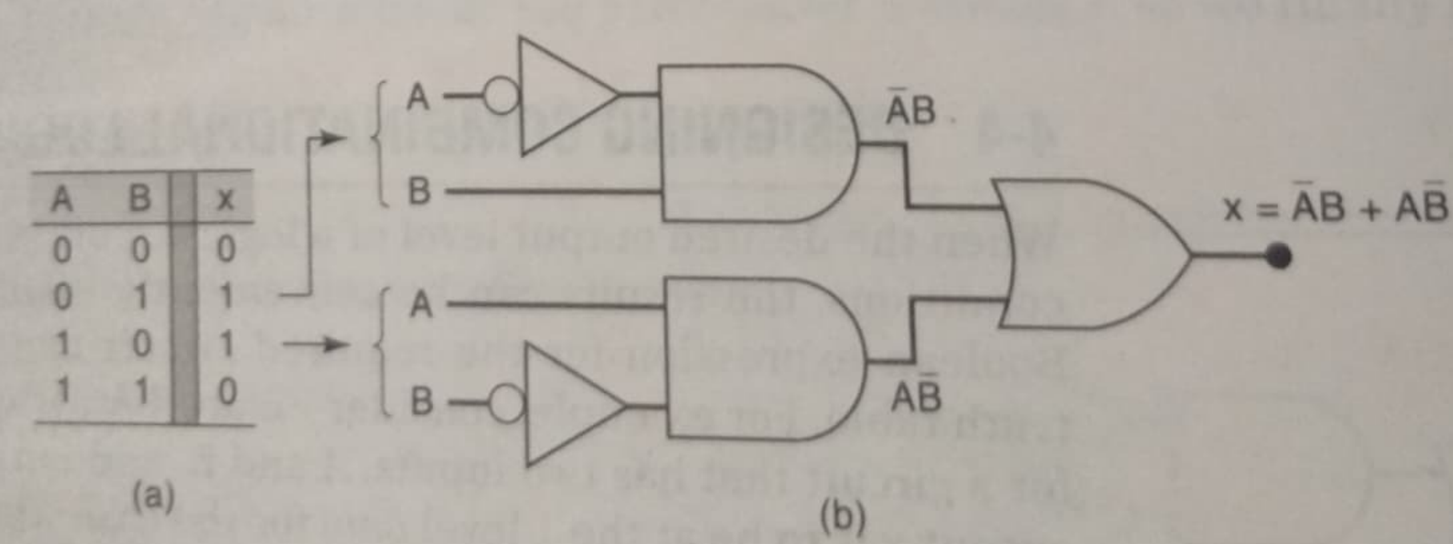

A	B	x
0	0	0
0	1	1
1	0	1
1	1	0

(a)

(b)

FIGURE 4-6 Each set of input conditions that is to produce a HIGH output is implemented by a separate AND gate. The AND outputs are ORed to produce the final output.

x must be HIGH for *either* condition, it should be clear that these terms should be ORed together to produce the desired output, x. This implementation is shown in Figure 4-6(b), where the resulting expression for the output is $x = \bar{A}B + A\bar{B}$.

In this example, an AND term is generated for each case in the table where the output x is to be a 1. The AND gate outputs are then ORed together to produce the total output x, which will be 1 when either AND term is 1. This same procedure can be extended to examples with more than two inputs. Consider the truth table for a three-input circuit (Table 4-1). Here there are three cases where the output x is to be 1. The required AND term for each of these cases is shown. Again, note that for each case where a variable is 0, it appears inverted in the AND term. The sum-of-products expression for x is obtained by ORing the three AND terms.

$$x = \overline{A}B\overline{C} + \overline{A}BC + ABC$$

Complete Design Procedure

Once the output expression has been determined from the truth table in sum-of-products form, it can easily be implemented using AND and OR gates and INVERTERs. Usually, however, the expression can be simplified, thereby resulting in a more efficient circuit. The following example illustrates the complete design procedure.

TABLE 4-1

A	B	C	x	
0	0	0	0	
0	0	1	0	
0	1	0	1	$\rightarrow \overline{A}B\overline{C}$
0	1	1	1	$\rightarrow \overline{A}BC$
1	0	0	0	
1	0	1	0	
1	1	0	0	
1	1	1	1	$\rightarrow ABC$

EXAMPLE 4-7

Design a logic circuit that has three inputs, A, B, and C, and whose output will be HIGH only when a majority of the inputs are HIGH.

Solution

Step 1. Set up the truth table.

On the basis of the problem statement, the output x should be 1 whenever two or more inputs are 1; for all other cases, the output should be 0 (Table 4-2).

TABLE 4-2

A	B	C	x	
0	0	0	0	
0	0	1	0	
0	1	0	0	
0	1	1	1	$\rightarrow \overline{A}BC$
1	0	0	0	
1	0	1	1	$\rightarrow A\overline{B}C$
1	1	0	1	$\rightarrow AB\overline{C}$
1	1	1	1	$\rightarrow ABC$

Step 2. Write the AND term for each case where the output is a 1.

There are four such cases. The AND terms are shown next to the truth table (Table 4-2). Again note that each AND term contains each input variable in either inverted or noninverted form.

Step 3. Write the sum-of-products expression for the output:

$$x = \overline{A}BC + A\overline{B}C + AB\overline{C} + ABC$$

Step 4. Simplify the output expression.

This expression can be simplified in several ways. Perhaps the quickest way is to realize that the last term ABC has two variables in common with each of the other terms. Thus, we can use the ABC term to factor with each of the other terms. The expression is rewritten with the ABC term occurring three times (recall from Example 4-2 that this is legal in Boolean algebra):

$$x = \overline{A}BC + ABC + A\overline{B}C + ABC + AB\overline{C} + ABC$$

Factoring the appropriate pairs of terms, we have

$$x = BC(\overline{A} + A) + AC(\overline{B} + B) + AB(\overline{C} + C)$$

Each term in parentheses is equal to 1, so we have

$$x = BC + AC + AB$$

Step 5. Implement the circuit for the final expression.

This expression is implemented in Figure 4-7. Since the expression is in SOP form, the circuit consists of a group of AND gates working into a single OR gate.

FIGURE 4-7 Example 4-7.

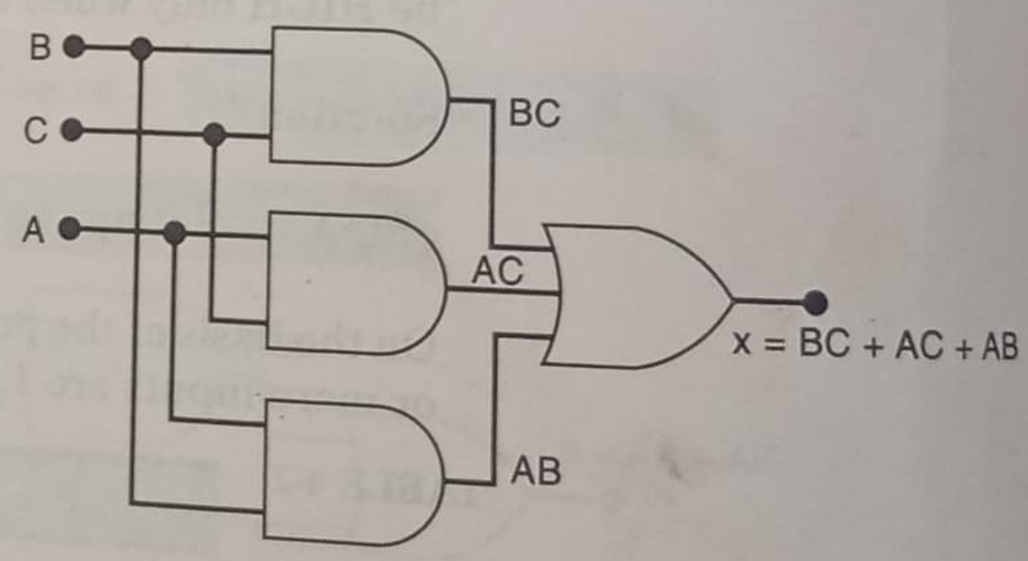

EXAMPLE 4-8

Refer to Figure 4-8(a), where an analog-to-digital converter is monitoring the dc voltage of a 12-V storage battery on an orbiting spaceship. The converter's output is a four-bit binary number, $ABCD$, corresponding to the battery voltage in steps of 1 V, with A as the MSB. The converter's binary outputs are fed to a logic circuit that is to produce a HIGH output as long as the binary value is greater than $0110_2 = 6_{10}$; that is, the battery voltage is greater than 6 V. Design this logic circuit.

(g) $y = (\overline{C + D}) + \overline{A}C\overline{D} + A\overline{B}\,\overline{C} + A\overline{B}C$

(h) $x = AB(\overline{CD}) + \overline{A}BD + \overline{B}\,\overline{C}\,\overline{D}$

4-2. Simplify the circuit of Figure 4-28 using Boolean algebra.

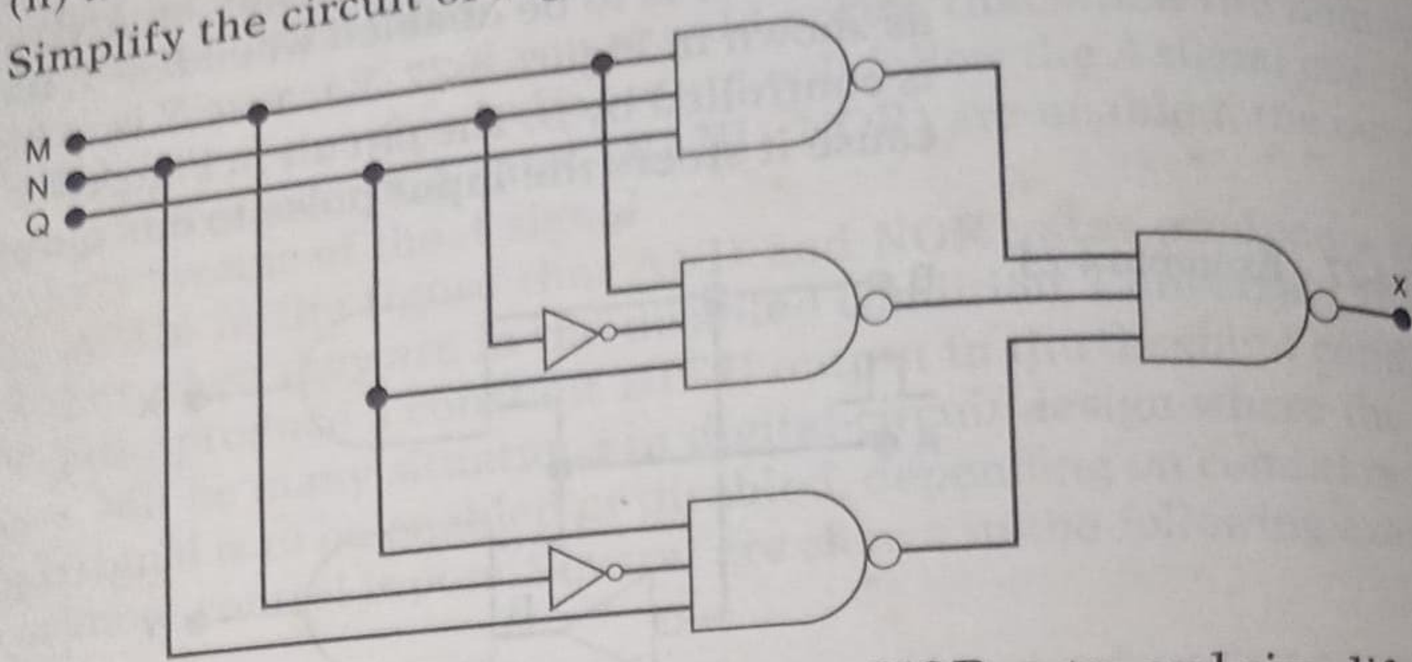

FIGURE 4-28 Problems 4-2 and 4-3.

4-3. Change each gate in Problem 4-2 to a NOR gate, and simplify the circuit using Boolean algebra.

SECTION 4-4

4-4. Design the logic circuit corresponding to the truth table shown in Table 4-5.

TABLE 4-5

A	B	C	X
0	0	0	1
0	0	1	0
0	1	0	1
0	1	1	1
1	0	0	1
1	0	1	0
1	1	0	0
1	1	1	1

4-5. Design a logic circuit whose output is HIGH *only* when a majority of inputs A, B, and C are LOW.

4-6. A manufacturing plant needs to have a horn sound to signal quitting time. The horn should be activated when either of the following conditions is met:

1. It's after 5 o'clock and all machines are shut down.
2. It's Friday, the production run for the day is complete, and all machines are shut down.

Design a logic circuit that will control the horn. (*Hint:* Use four logic input variables to represent the various conditions; for example, input A will be HIGH only when the time of day is 5 o'clock or later.)

4-7. A four-bit binary number is represented as $A_3A_2A_1A_0$, where A_3, A_2, A_1, and A_0 represent the individual bits and A_0 is equal to the LSB. Design a logic circuit that will produce a HIGH output whenever the binary number is greater than 0010 and less than 1000.

4-8. Figure 4-29 shows a diagram for an automobile alarm circuit used to detect certain undesirable conditions. The three switches are used to indicate the status of the door by the driver's seat, the ignition, and the headlights, respectively. Design the logic circuit with these three