From atoms to large quantum systems

Asbjørn Bækgaard Lauritsen
alaurits@ist.ac.at

MIX seminar

2023-11-15

Physics of emission spectra

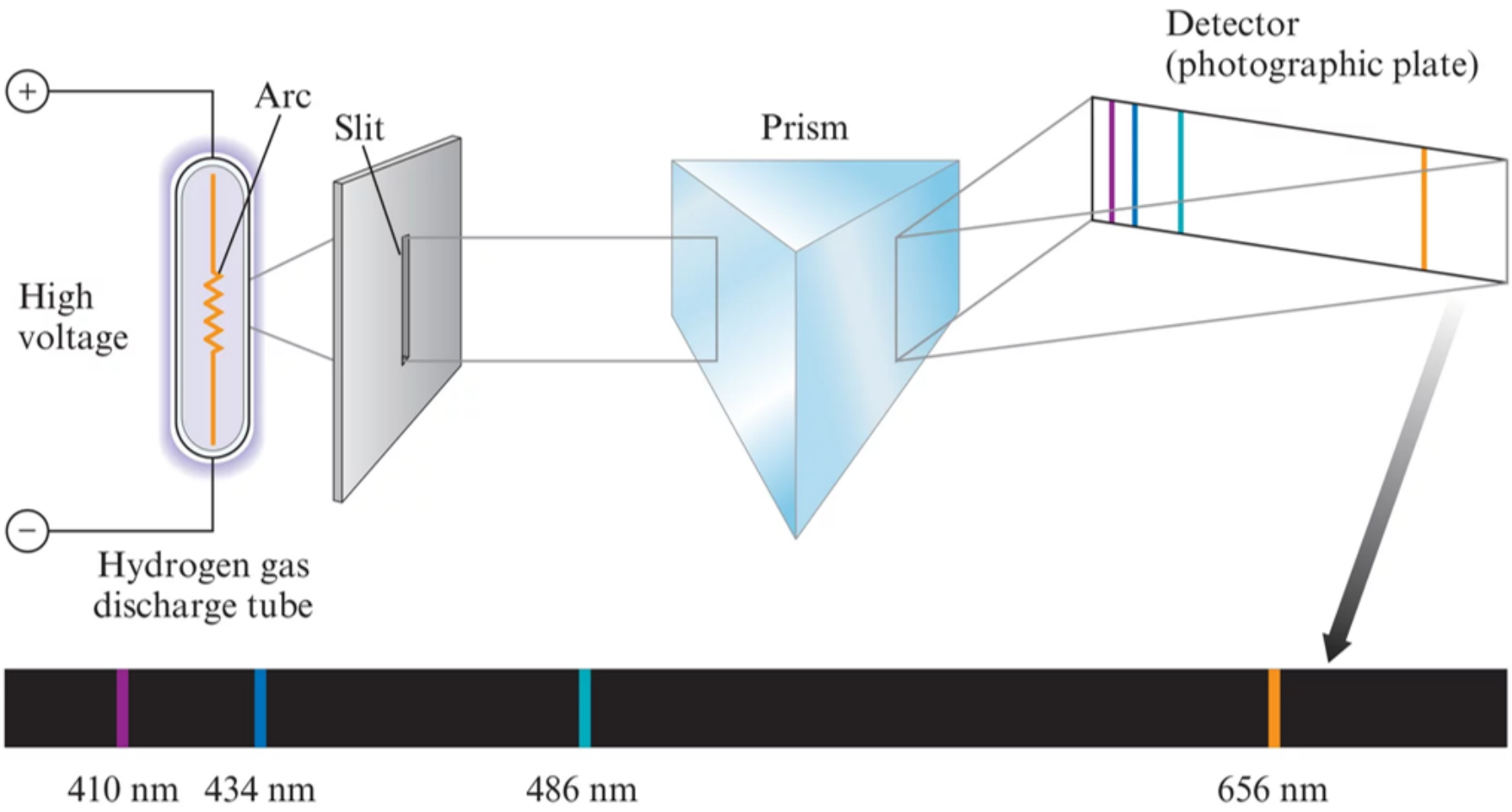

Physics of emission spectra

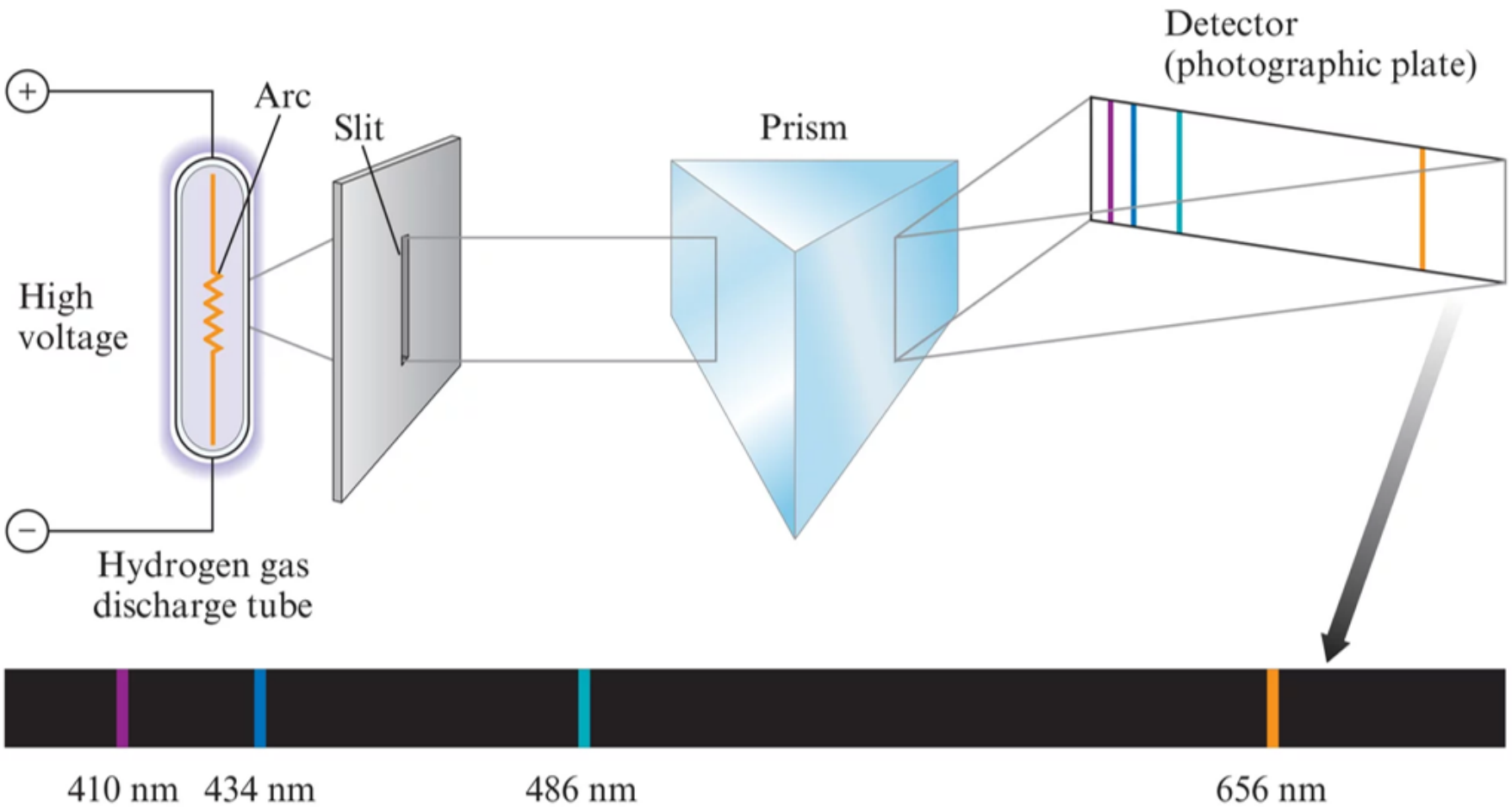

Question

What does this "spectrum" have to do with the spectrum (i.e. eigenvalues) of an operator/matrix?

Physics of emission spectra

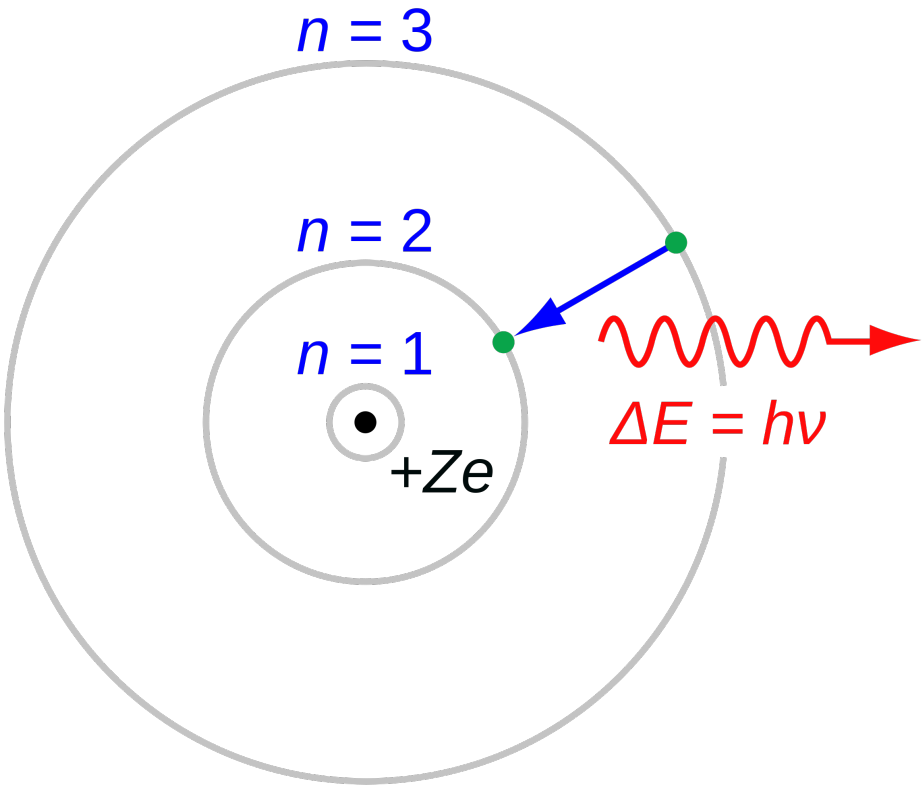

Bohr model of the atom:
Discrete energy levels with energies

$$E_n = -13.6\,\mathrm{eV} \cdot \frac{1}{n^2}$$

Electron "jumps" from one energy level to another and emits light with energy of the difference.

Physics of emission spectra

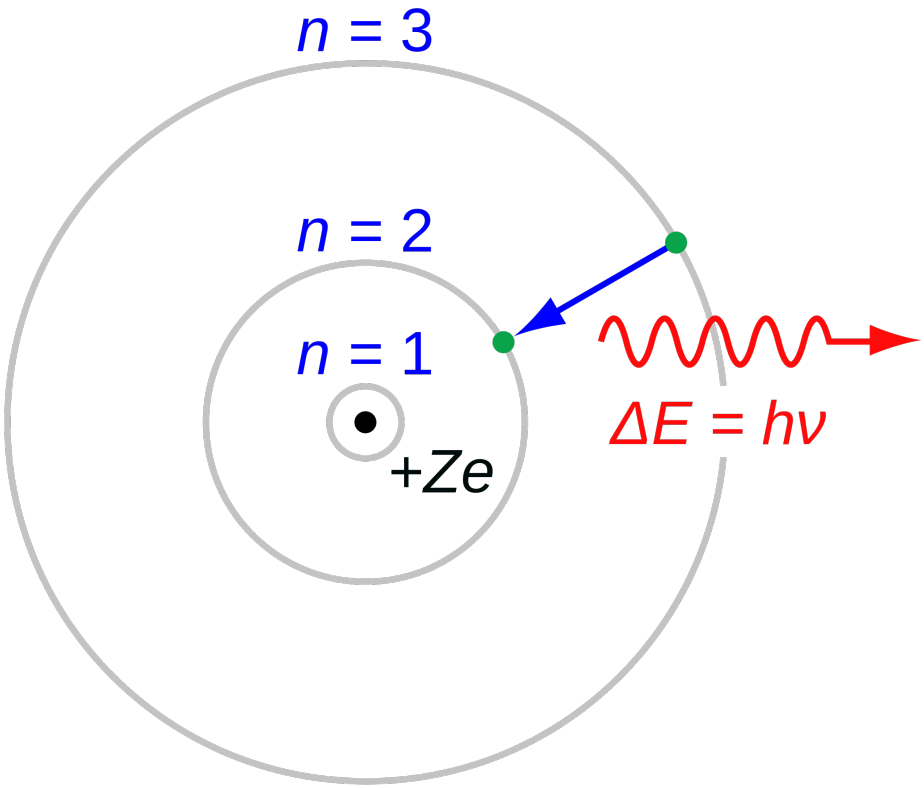

Bohr model of the atom:
Discrete energy levels with energies

$$E_n = -13.6\,\mathrm{eV} \cdot \frac{1}{n^2}$$

Electron "jumps" from one energy level to another and emits light with energy of the difference.

Question

How can we understand this?
Make rigorous mathematics?

Physics of emission spectra

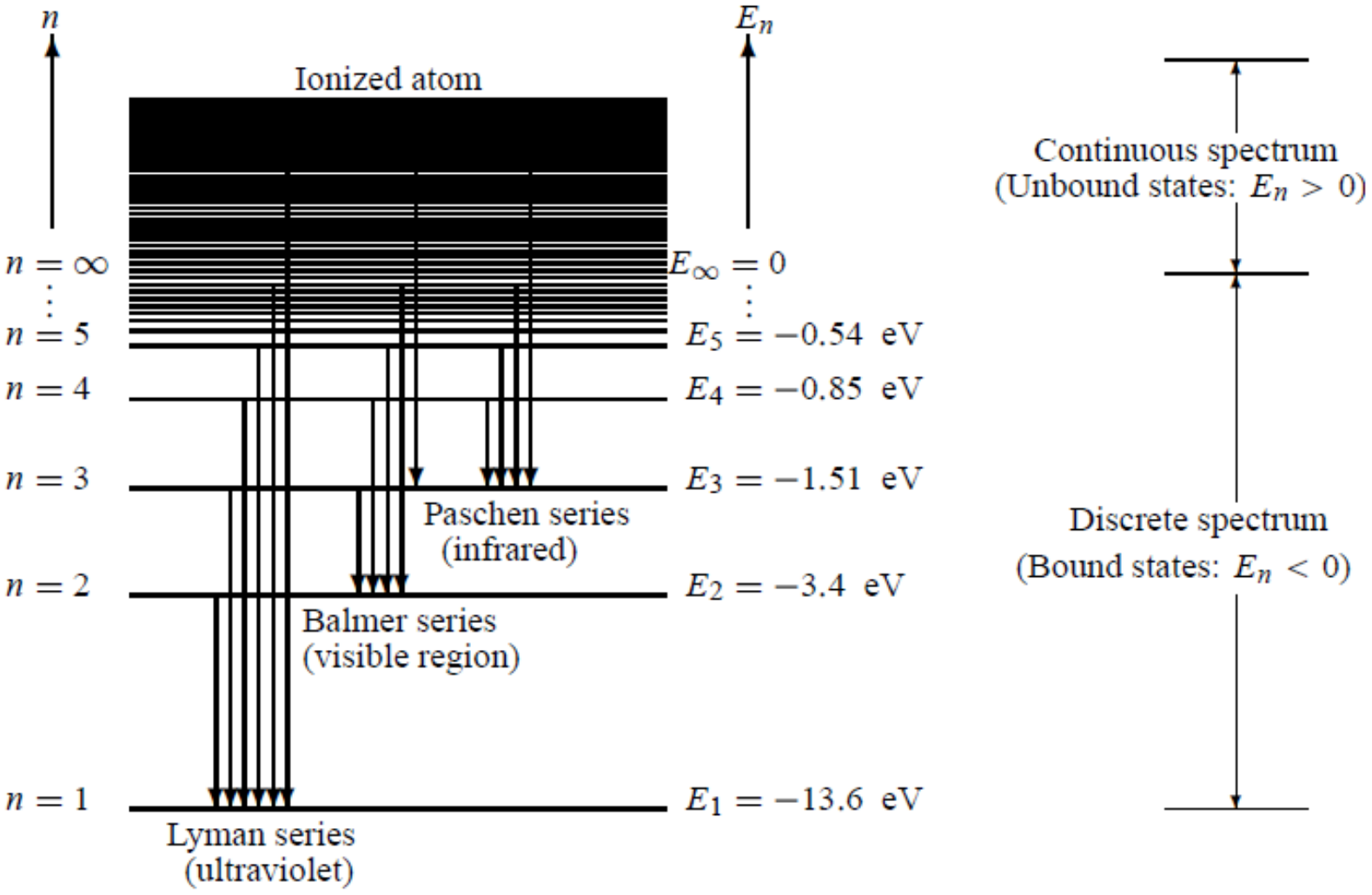

Figure 1.12 Energy levels and transitions between them for the hydrogen atom.

Underlying mathematics

Quantum mechanical system given by Hamiltonian operator

$$H = -\Delta - \frac{1}{|x|}, \qquad \langle \psi | H \psi \rangle_{L^2(\mathbb{R}^3)} = \int_{\mathbb{R}^3} \left(|\nabla \psi(x)|^2 - \frac{1}{|x|} |\psi(x)|^2 \right) \mathrm{d}x.$$

Defined on $C_c^\infty(\mathbb{R}^3)$. Self-adjoint extension on the domain $H^1(\mathbb{R}^3) \subset L^2(\mathbb{R}^3)$.

Underlying mathematics

Quantum mechanical system given by Hamiltonian operator

$$H = -\Delta - \frac{1}{|x|}, \qquad \langle \psi | H \psi \rangle_{L^2(\mathbb{R}^3)} = \int_{\mathbb{R}^3} \left(|\nabla \psi(x)|^2 - \frac{1}{|x|} |\psi(x)|^2 \right) \mathrm{d}x.$$

Defined on $C_c^\infty(\mathbb{R}^3)$. Self-adjoint extension on the domain $H^1(\mathbb{R}^3) \subset L^2(\mathbb{R}^3)$.

Theorem

The spectrum of H is

$$\sigma(H) = \{E_n : n \in \mathbb{N}\} \cup [0, \infty), \qquad E_n = \frac{-1}{4n^2}.$$

The eigenvalues E_n have multiplicity n^2.

With the right choice of units we recover the "energies" $E_n = -13.6\,\mathrm{eV} \cdot \frac{1}{n^2}$ as eigenvalues of H.

Positive spectrum $[0, \infty)$ corresponds to a "free electron" not bound in any shell, but moving freely through space.

Eigenfunctions

Question

What do the eigenfunctions look like?

Eigenfunction problem

$$H\psi = E_n\psi$$

Eigenfunctions

Question

What do the eigenfunctions look like?

Eigenfunction problem

$$H\psi = E_n\psi$$

is explicitly solvable.

Solution are the orbitals well-known from chemistry:

$$\psi_{n\ell m}(x) = \mathrm{pol}_{n,\ell}(|x|)e^{-c_n|x|}\,Y_{\ell,m}(x/|x|)$$

with $Y_{\ell,m}$ the spherical harmonics.

$$\ell \in \{0,\ldots,n-1\},$$
$$m \in \{-\ell,\ell+1,\ldots,\ell\}.$$

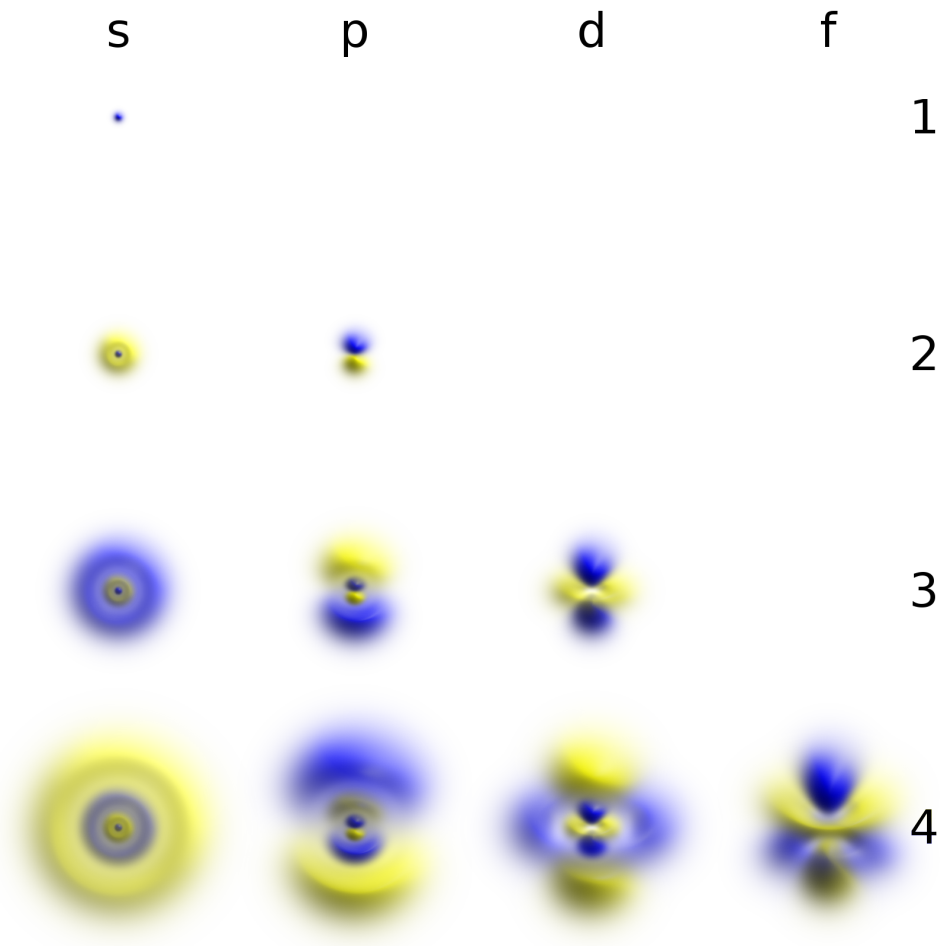

Shape of atoms $\rightsquigarrow$ chemistry.

More electrons / particles

Generalize to system with more electrons/particles and different external potential (effect of the nucleus).

$$H_N = \sum_{j=1}^{N} \left[-\Delta_{x_j} + U(x_j)\right] + \sum_{j<k} V(x_j - x_k)$$

$$\langle \psi_N | H_N | \psi_N \rangle_{L^2(\mathbb{R}^{3N})} = \int \cdots \int \left[\sum_{j=1}^{N} \left| \nabla_{x_j} \psi_N(x_1, \ldots, x_N) \right|^2 \right.$$
$$\left. + \sum_{j=1}^{N} U(x_j) \left| \psi_N(x_1, \ldots, x_N) \right|^2 + \sum_{j<k} V(x_j - x_k) \left| \psi_N(x_1, \ldots, x_N) \right|^2 \right] \mathrm{d}x_1 \ldots \mathrm{d}x_N.$$

Now defined on (well-chosen subspace of)

$$L^2_a(\mathbb{R}^{3N}) = \bigwedge^{N} L^2(\mathbb{R}^3) = \{\psi(x_1, \ldots, x_N) \in L^2(\mathbb{R}^{3N})$$
$$: \psi(x_{\pi(1)}, \ldots, x_{\pi(N)}) = (-1)^{\pi} \psi(x_1, \ldots, x_N) \, \forall \pi \in \mathcal{S}_N\}$$

Simplifications

$$H_N = \sum_{j=1}^{N} \left[-\Delta_{x_j} + U(x_j) \right] + \sum_{j<k} V(x_j - x_k)$$

- Neglect interaction between electrons, i.e. $V = 0$
  - $\rightsquigarrow$ With $U(x) = -Z/|x|$ fill up shells from inside (meaning small n first).
  - $\rightsquigarrow$ Primitive picture of periodic system.

Simplifications

$$H_N = \sum_{j=1}^{N} \left[-\Delta_{x_j} + U(x_j) \right] + \sum_{j<k} V(x_j - x_k)$$

- Neglect interaction between electrons, i.e. $V = 0$
  - $\rightsquigarrow$ With $U(x) = -Z/|x|$ fill up shells from inside (meaning small n first).
  - $\rightsquigarrow$ Primitive picture of periodic system.
- Pretend instead H_N is instead "random" and hope that some features are captured as $N \to \infty$
  - $\rightsquigarrow$ Study large random matrices and find universal properties.

Simplifications

$$H_N = \sum_{j=1}^{N} \left[-\Delta_{x_j} + U(x_j) \right] + \sum_{j<k} V(x_j - x_k)$$

- Neglect interaction between electrons, i.e. $V = 0$
  - $\rightsquigarrow$ With $U(x) = -Z/|x|$ fill up shells from inside (meaning small n first).
  - $\rightsquigarrow$ Primitive picture of periodic system.
- Pretend instead H_N is instead "random" and hope that some features are captured as $N \to \infty$
  - $\rightsquigarrow$ Study large random matrices and find universal properties.
- Pretend $\langle \psi | H_N | \psi \rangle$ can be written as function of $\rho_\psi(x) = N \int \cdots \int |\psi(x, x_2, x_3, \ldots, x_N)|^2 \, \mathrm{d}x_2 \ldots \mathrm{d}x_N$
  - $\rightsquigarrow$ Density Functional Theory, very successful. Some of the most cited papers (across all fields) ever. Can find shapes of molecules.

Simplifications

$$H_N = \sum_{j=1}^{N} \left[-\Delta_{x_j} + U(x_j) \right] + \sum_{j<k} V(x_j - x_k)$$

- Neglect interaction between electrons, i.e. $V = 0$
  - $\rightsquigarrow$ With $U(x) = -Z/|x|$ fill up shells from inside (meaning small n first).
  - $\rightsquigarrow$ Primitive picture of periodic system.
- Pretend instead H_N is instead "random" and hope that some features are captured as $N \to \infty$
  - $\rightsquigarrow$ Study large random matrices and find universal properties.
- Pretend $\langle \psi | H_N | \psi \rangle$ can be written as function of $\rho_\psi(x) = N \int \cdots \int |\psi(x, x_2, x_3, \ldots, x_N)|^2 \, \mathrm{d}x_2 \ldots \mathrm{d}x_N$
  - $\rightsquigarrow$ Density Functional Theory, very successful. Some of the most cited papers (across all fields) ever. Can find shapes of molecules.
- Study limiting regime