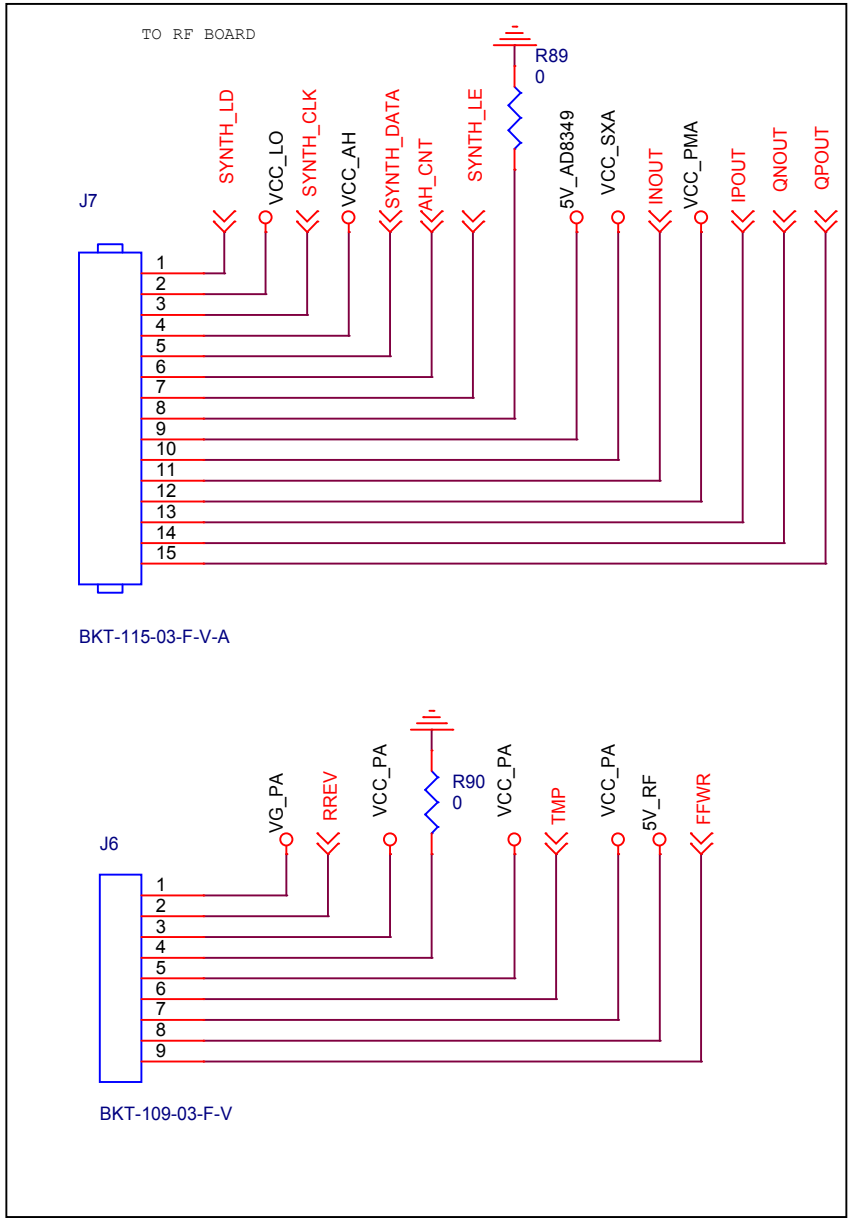

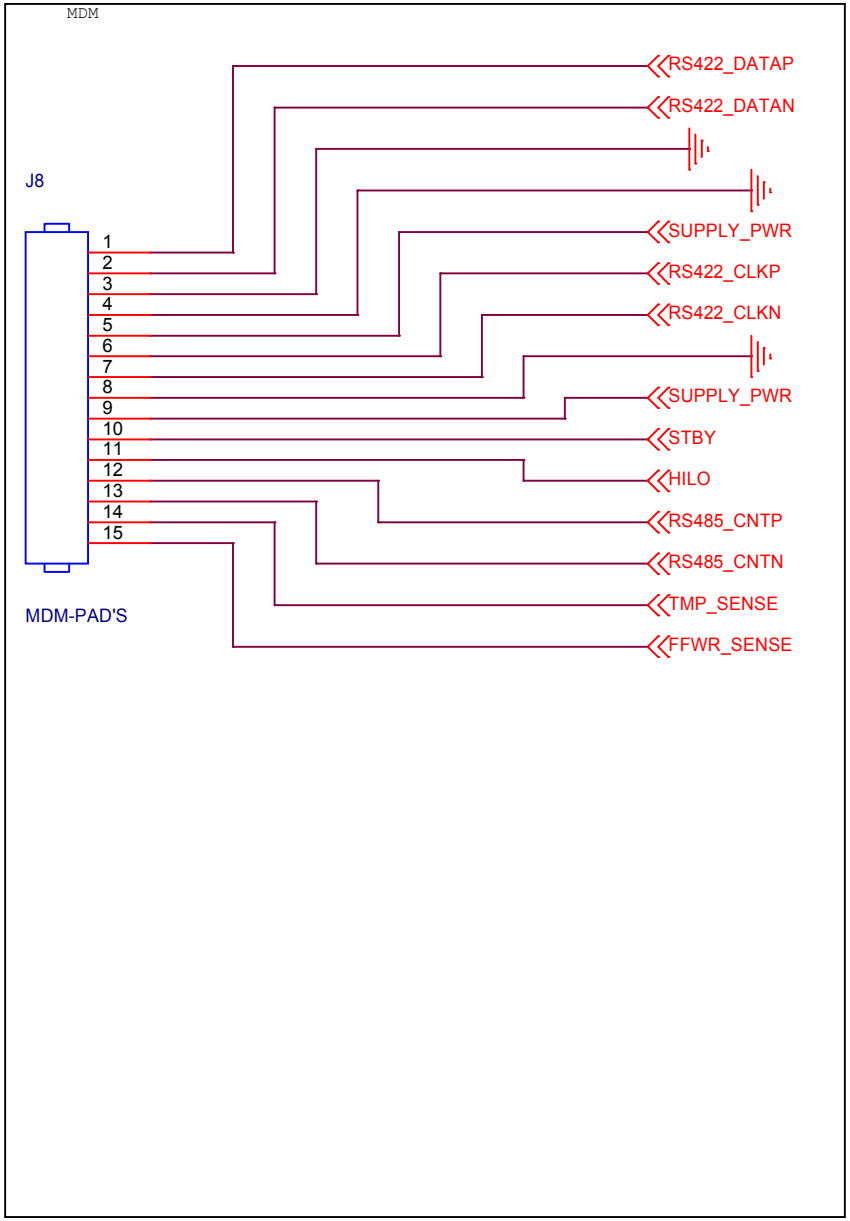

Title	<Title>	
Size A	Document Number <Doc>	Rev <RevCo
Date: Wednesday, November 22, 2017	Sheet 1 of 5	

PDF created with pdfFactory trial version www.pdffactory.com

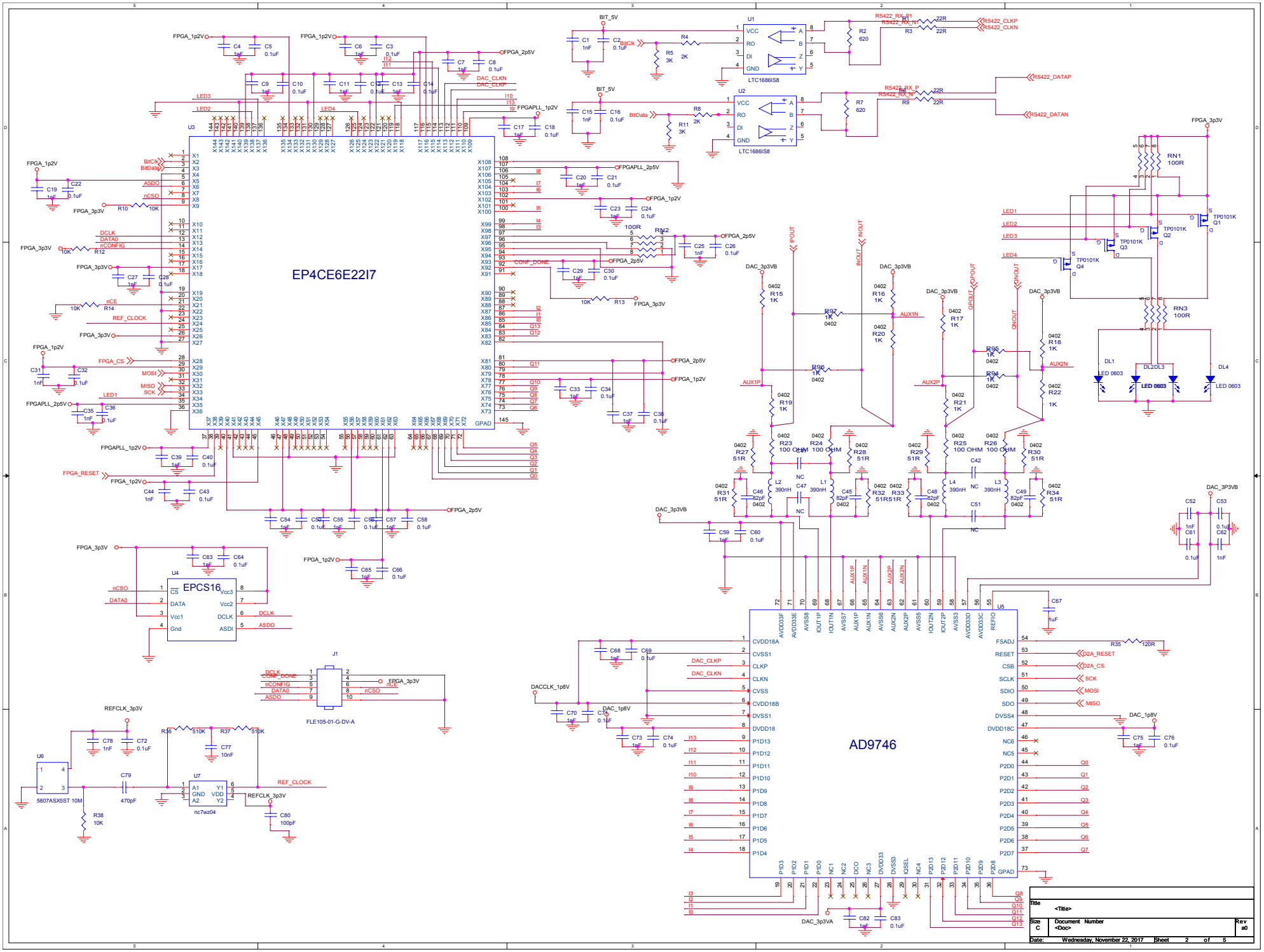

PDF created with pdfFactory trial version www.pdffactory.com

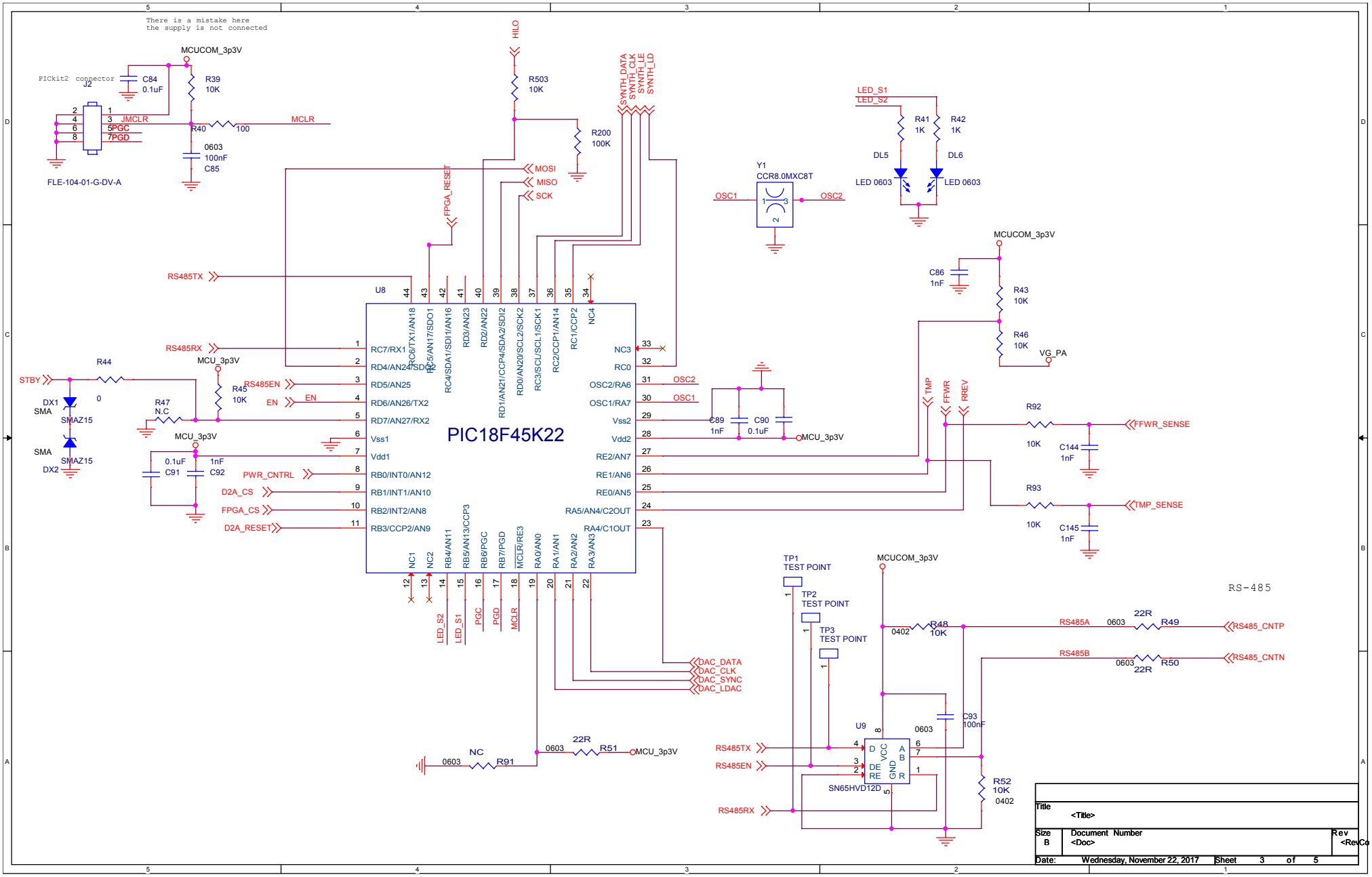

PDF created with pdfFactory trial version www.pdffactory.com

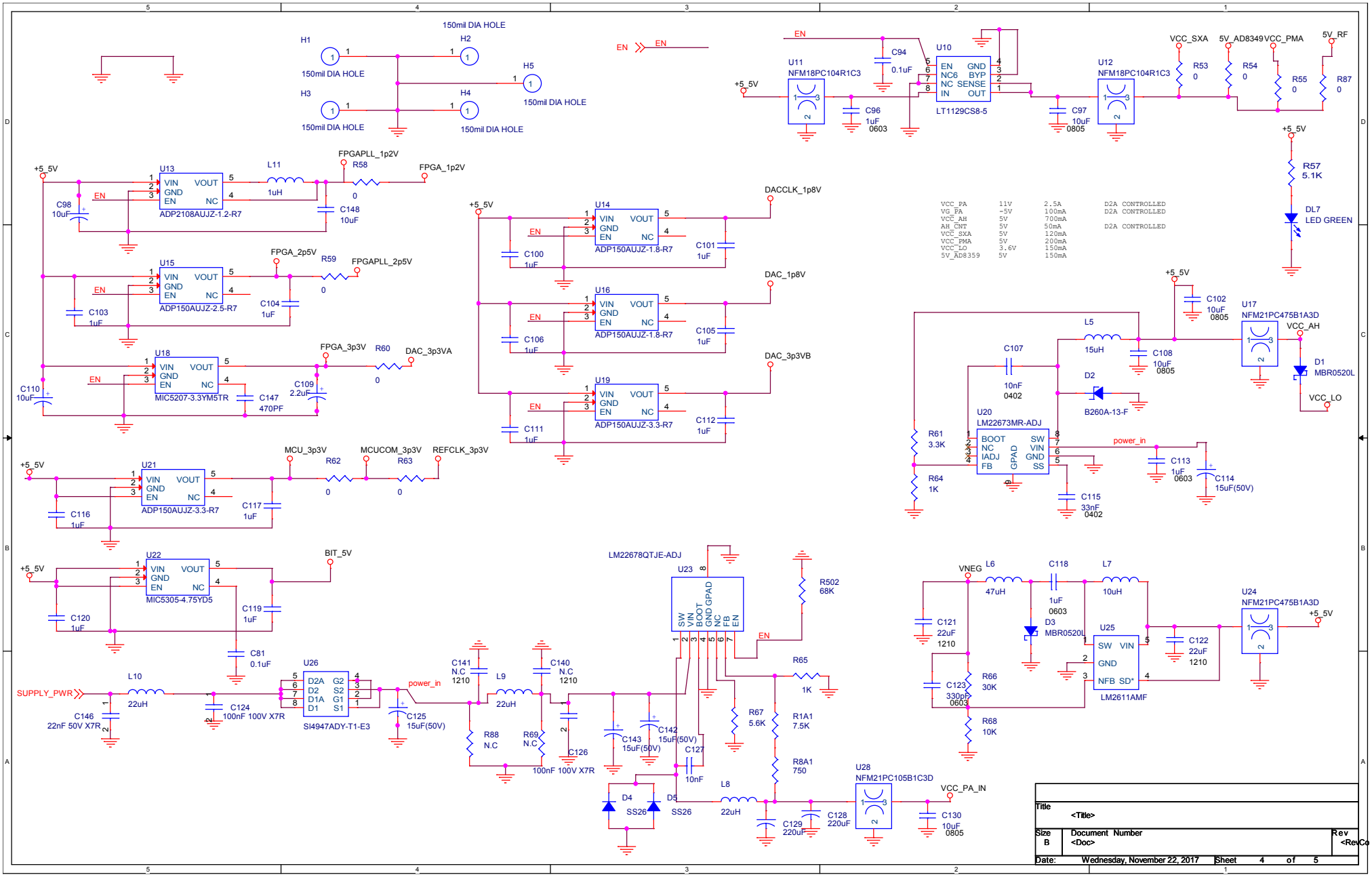

PDF created with pdfFactory trial version www.pdffactory.com

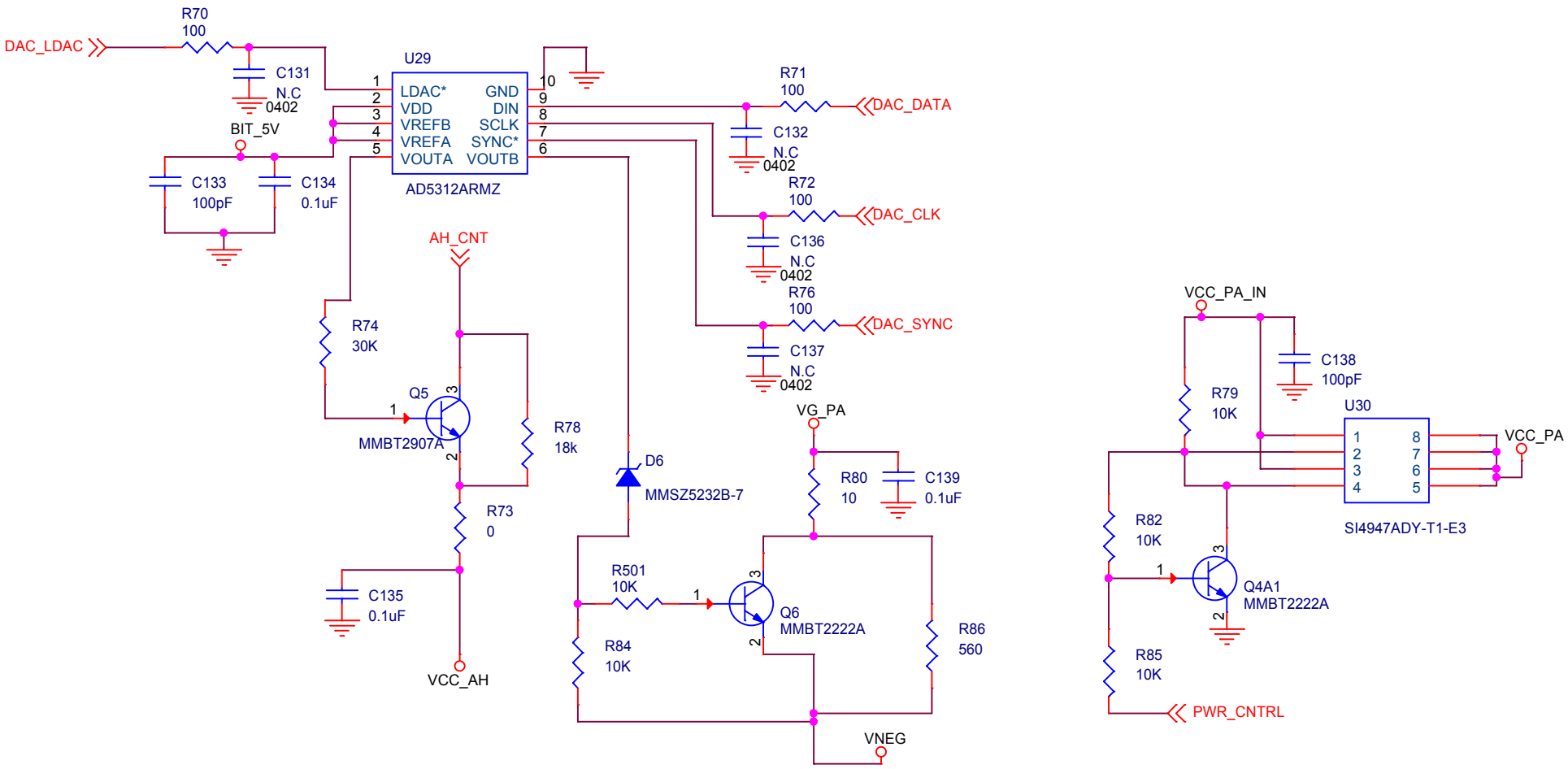

Title	<Title>	
Size A	Document Number <Doc>	Rev a0
Date: Wednesday, November 22, 2017	Sheet 5 of 5	

PDF created with pdfFactory trial version www.pdffactory.com