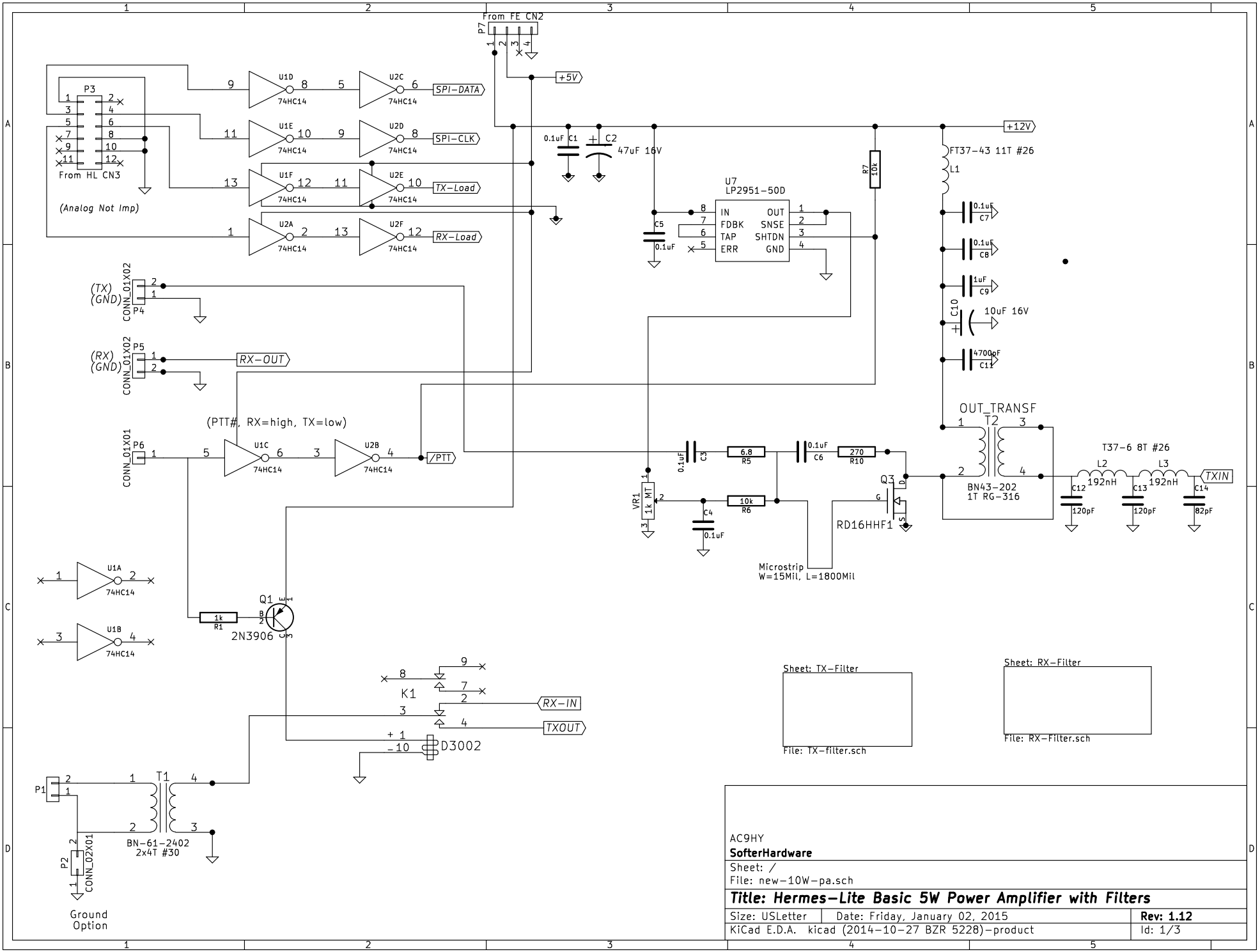


AC9HY

**SofterHardware**

Sheet: /

File: new-10W-pa.sch

***Title: Hermes-Lite Basic 5W Power Amplifier with Filters***

| | | |
|---|---|---|
| Size: USLetter | Date: Friday, January 02, 2015 | **Rev: 1.12** |
| KiCad E.D.A. kicad (2014-10-27 BZR 5228)-product | | Id: 1/3 |

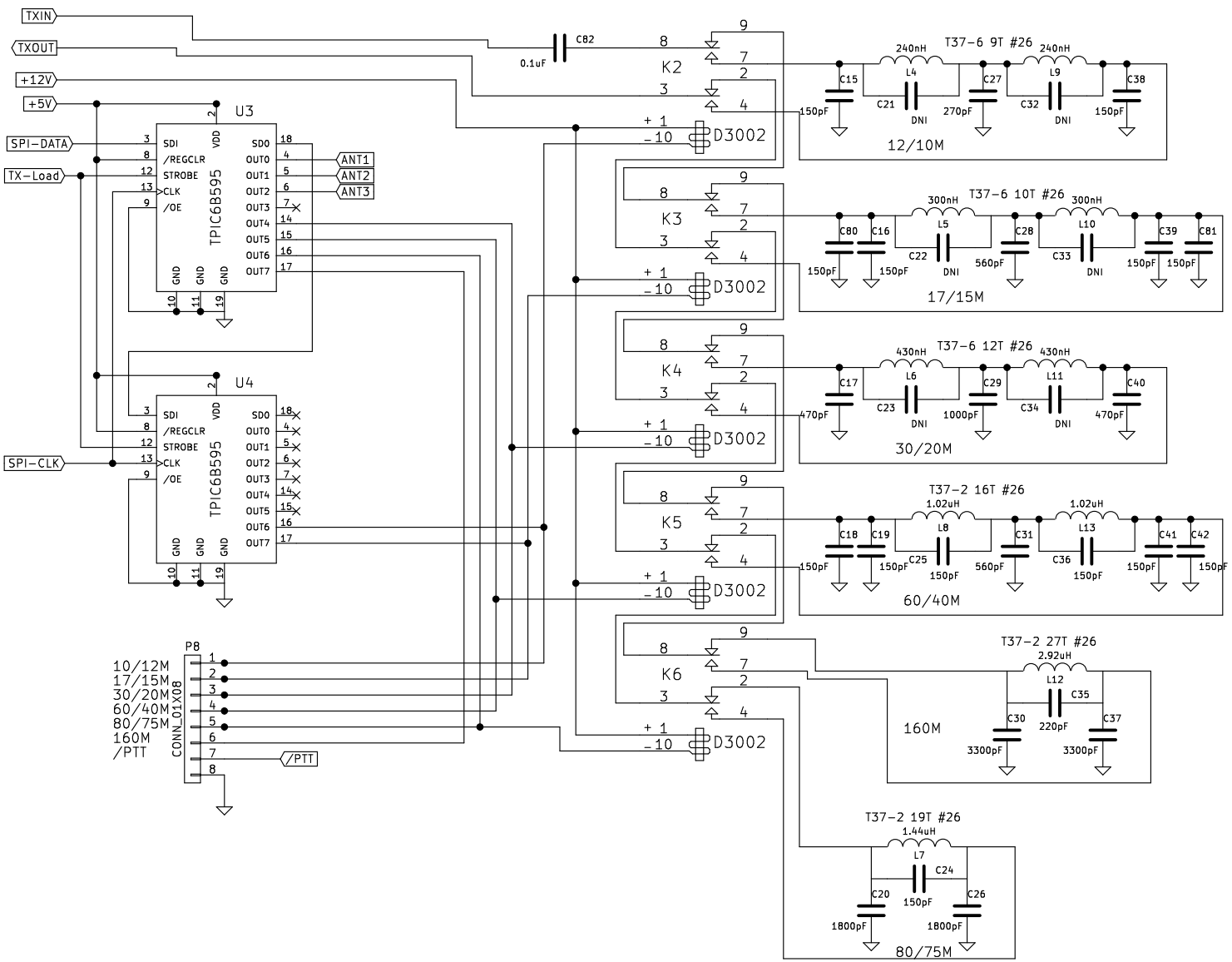


For use with an external amplifier, such as the Hardrock 50, all of the filter components and relays on this sheet can be omitted. Jumper pin 3 to pin 8 on K2 to bypass TXIN to TXOUT. U3 and U4 can be omitted if connector P8 is unused.

AC9HY

**SofterHardware**

Sheet: /TX-Filter/

File: TX-filter.sch

***Title: Hermes-Lite Basic TX Filter 160m-10m***

| | | |
|---|---|---|
| Size: USLetter | Date: Friday, January 02, 2015 | **Rev: 1.12** |
| KiCad E.D.A. kicad (2014-10-27 BZR 5228)-product | | Id: 2/3 |

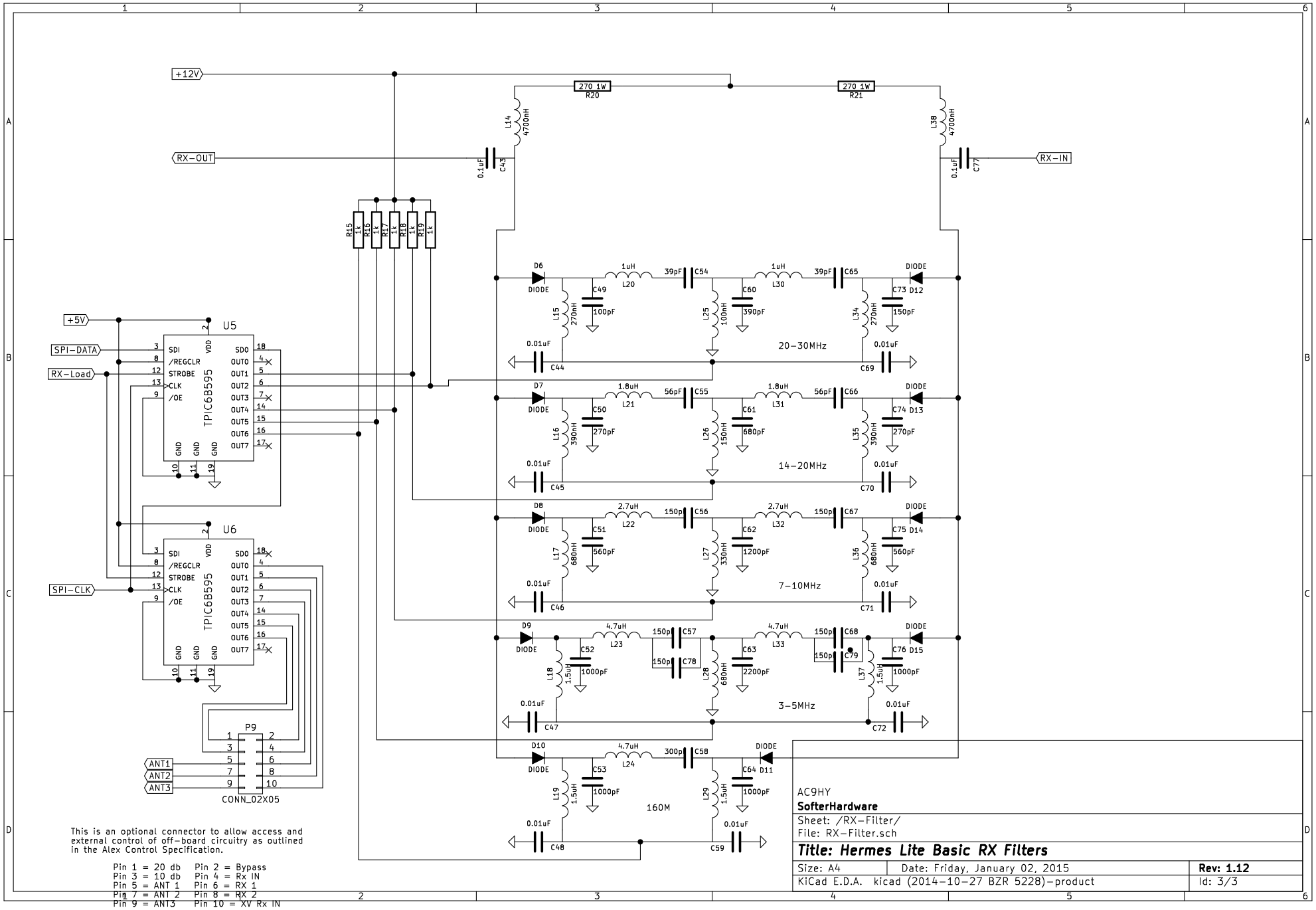


This is an optional connector to allow access and external control of off-board circuitry as outlined in the Alex Control Specification.

Pin 1 = 20 db  Pin 2 = Bypass
Pin 3 = 10 db  Pin 4 = Rx IN
Pin 5 = ANT 1  Pin 6 = RX 1
Pin 7 = ANT 2  Pin 8 = RX 2
Pin 9 = ANT3  Pin 10 = XV Rx IN

AC9HY
**SofterHardware**
Sheet: /RX-Filter/
File: RX-Filter.sch

***Title: Hermes Lite Basic RX Filters***

| | | |
|---|---|---|
| Size: A4 | Date: Friday, January 02, 2015 | **Rev: 1.12** |
| KiCad E.D.A. kicad (2014-10-27 BZR 5228)-product | | Id: 3/3 |