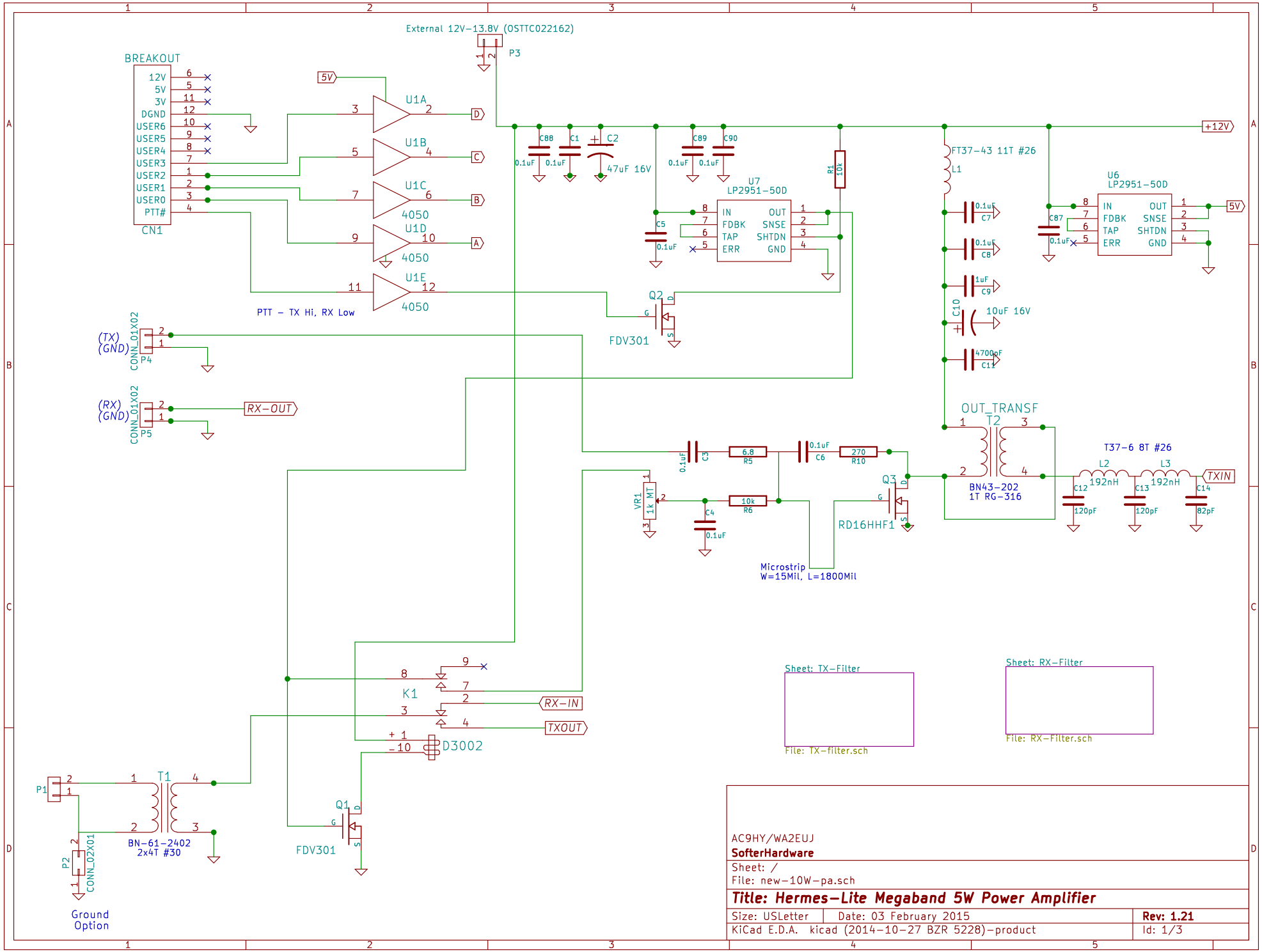
External 12V-13.8V (OSTTC022162)
P3
BREAKOUT
12V
5V
3V
DGND
USER6
USER5
USER4
USER3
USER2
USER1
USER0
PTT#
CN1
U1A
U1B
U1C
U1D
U1E
4050
PTT - TX Hi, RX Low
C88
C1
C2
47uF 16V
C89
C90
0.1uF
U7
LP2951-50D
IN
FDBK
TAP
ERR
OUT
SNSE
SHTDN
GND
R1
10k
C5
Q2
FDV301
+12V
FT37-43 11T #26
L1
C7
C8
C9
C10
10uF 16V
C11
4700pF
U6
LP2951-50D
C87
5V
(TX)
(GND)
CONN_01X02
P4
(RX)
(GND)
P5
RX-OUT
OUT_TRANSF
T2
BN43-202
1T RG-316
T37-6 8T #26
L2
L3
192nH
C12
C13
C14
120pF
82pF
TXIN
C3
6.8
R5
C6
270
R10
Q3
RD16HHF1
VR1
1k MT
C4
10k
R6
Microstrip
W=15Mil, L=1800Mil
K1
RX-IN
TXOUT
D3002
Sheet: TX-Filter
File: TX-filter.sch
Sheet: RX-Filter
File: RX-Filter.sch
P1
T1
BN-61-2402
2x4T #30
P2
CONN_02X01
Ground
Option
Q1
FDV301
AC9HY/WA2EUJ
SofterHardware
Sheet: /
File: new-10W-pa.sch
Title: Hermes-Lite Megaband 5W Power Amplifier
Size: USLetter
Date: 03 February 2015
Rev: 1.21
KiCad E.D.A. kicad (2014-10-27 BZR 5228)-product
Id: 1/3

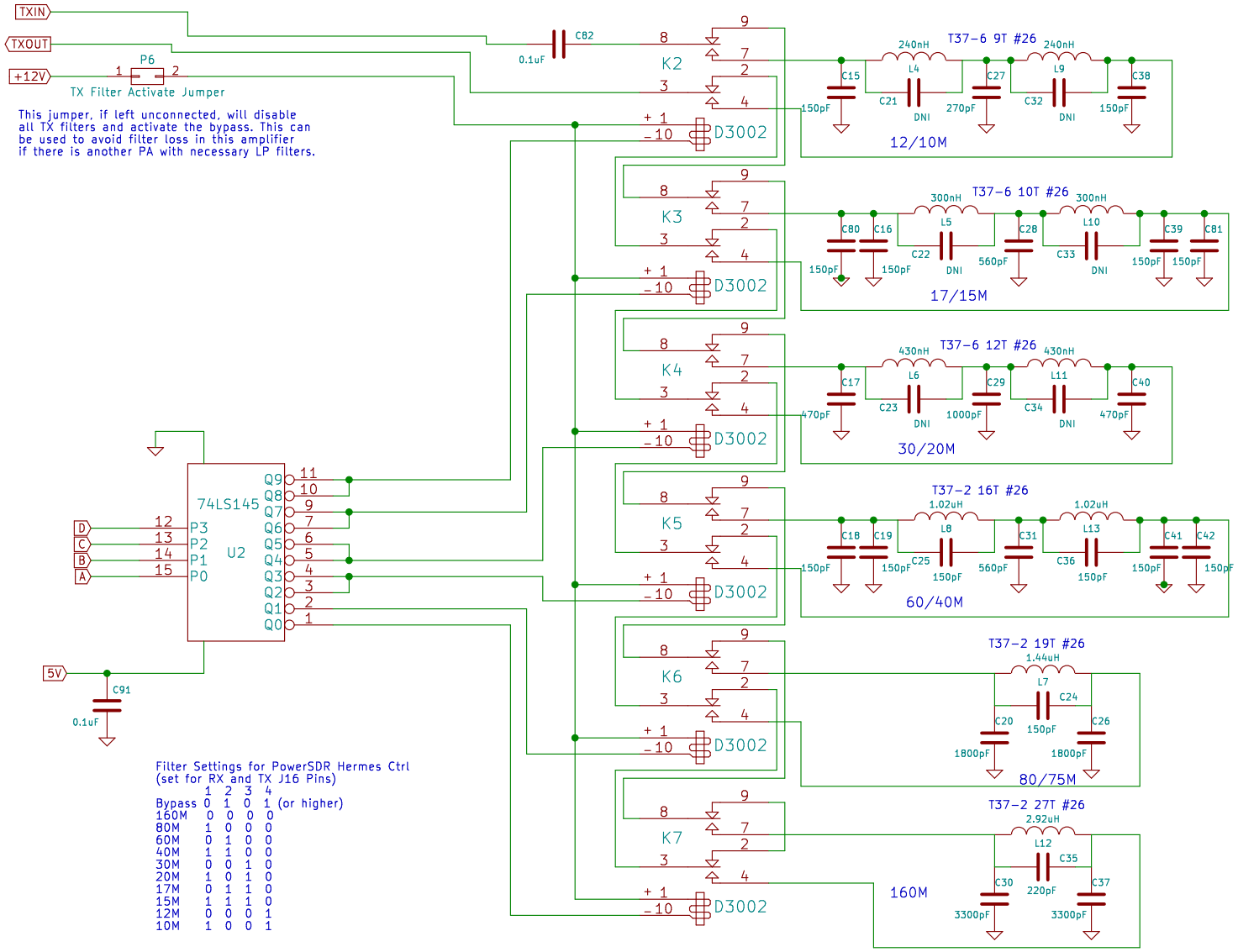

Filter Settings for PowerSDR Hermes Ctrl
(set for RX and TX J16 Pins)

	1	2	3	4
Bypass	0	1	0	1 (or higher)
160M	0	0	0	0
80M	1	0	0	0
60M	0	1	0	0
40M	1	1	0	0
30M	0	0	1	0
20M	1	0	1	0
17M	0	1	1	0
15M	1	1	1	0
12M	0	0	0	1
10M	1	0	0	1

AC9HY/WA2EUJ
SofterHardware
Sheet: /TX-Filter/
File: TX-filter.sch

Title: Hermes-Lite TX Filter 160m-10m

Size: USLetter	Date: 03 February 2015	**Rev: 1.21**
KiCad E.D.A. kicad (2014-10-27 BZR 5228)-product		Id: 2/3

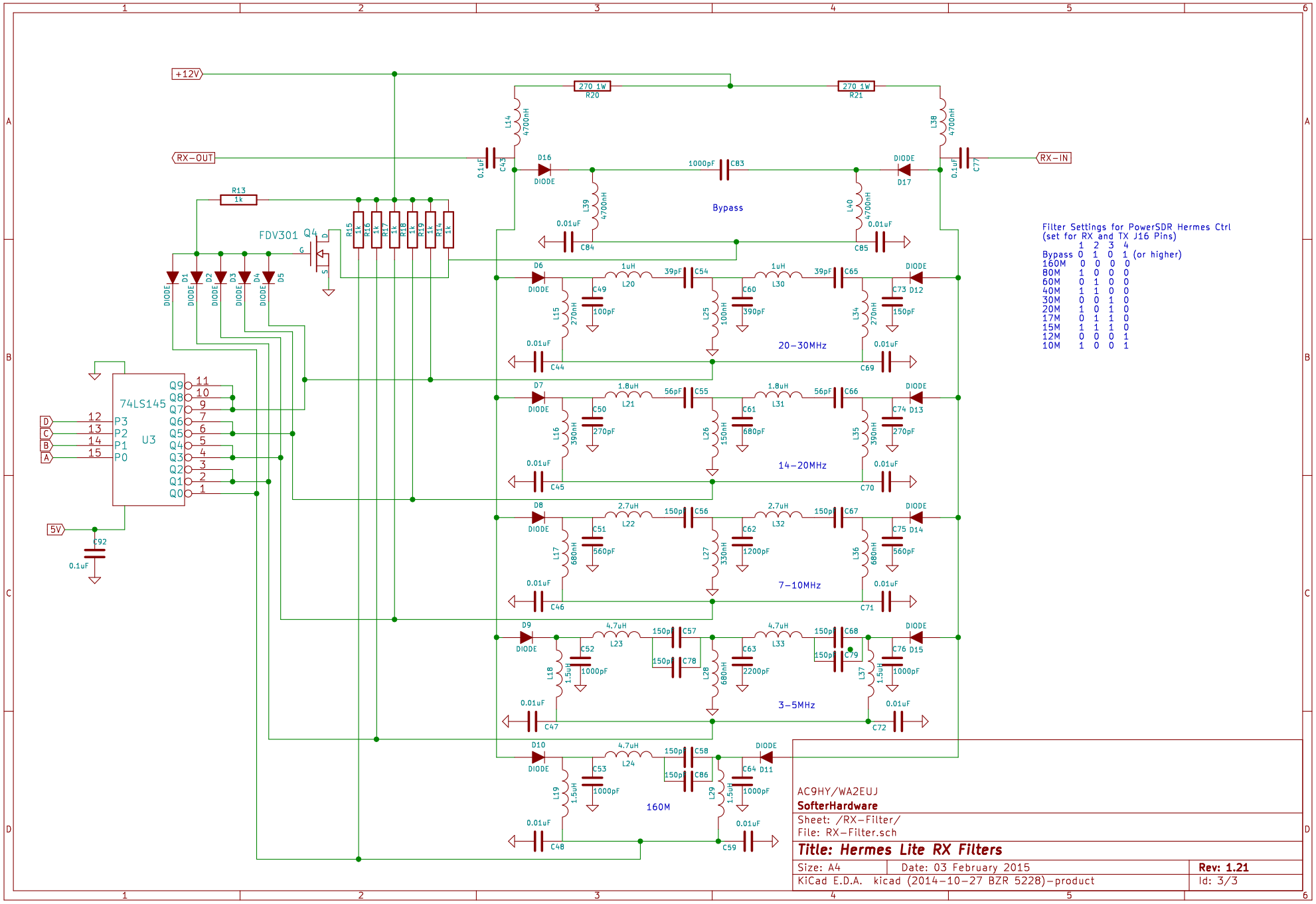
+12V
RX-OUT
RX-IN
R20 270 1W
R21 270 1W
L14 4700nH
L38 4700nH
C43 0.1uF
C77 0.1uF
D16 DIODE
D17 DIODE
C83 1000pF
Bypass
L39 4700nH
L40 4700nH
C84 0.01uF
C85 0.01uF
R13 1k
FDV301 Q4
R15 1k
R16 1k
R17 1k
R18 1k
R19 1k
R14 1k
D1 DIODE
D2 DIODE
D3 DIODE
D4 DIODE
D5 DIODE
74LS145
U3
P3
P2
P1
P0
Q9
Q8
Q7
Q6
Q5
Q4
Q3
Q2
Q1
Q0
D
C
B
A
5V
C92 0.1uF
D6 DIODE
L20 1uH
C54 39pF
L30 1uH
C65 39pF
D12 DIODE
L15 270nH
C49 100pF
L25 100nH
C60 390pF
L34 270nH
C73 150pF
C44 0.01uF
C69 0.01uF
20-30MHz
D7 DIODE
L21 1.8uH
C55 56pF
L31 1.8uH
C66 56pF
D13 DIODE
L16 390nH
C50 270pF
L26 150nH
C61 680pF
L35 390nH
C74 270pF
C45 0.01uF
C70 0.01uF
14-20MHz
D8 DIODE
L22 2.7uH
C56 150pF
L32 2.7uH
C67 150pF
D14 DIODE
L17 680nH
C51 560pF
L27 330nH
C62 1200pF
L36 680nH
C75 560pF
C46 0.01uF
C71 0.01uF
7-10MHz
D9 DIODE
L23 4.7uH
C57 150pF
L33 4.7uH
C68 150pF
D15 DIODE
L18 1.5uH
C52 1000pF
C78 150pF
L28 680nH
C63 2200pF
C79 150pF
L37 1.5uH
C76 1000pF
C47 0.01uF
C72 0.01uF
3-5MHz
D10 DIODE
L24 4.7uH
C58 150pF
D11 DIODE
L19 1.5uH
C53 1000pF
C86 150pF
L29 1.5uH
C64 1000pF
C48 0.01uF
C59 0.01uF
160M
Filter Settings for PowerSDR Hermes Ctrl
(set for RX and TX J16 Pins)
1 2 3 4
Bypass 0 1 0 1 (or higher)
160M 0 0 0 0
80M 1 0 0 0
60M 0 1 0 0
40M 1 1 0 0
30M 0 0 1 0
20M 1 0 1 0
17M 0 1 1 0
15M 1 1 1 0
12M 0 0 0 1
10M 1 0 0 1
AC9HY/WA2EUJ
SofterHardware
Sheet: /RX-Filter/
File: RX-Filter.sch
Title: Hermes Lite RX Filters
Size: A4
Date: 03 February 2015
Rev: 1.21
KiCad E.D.A. kicad (2014-10-27 BZR 5228)-product
Id: 3/3