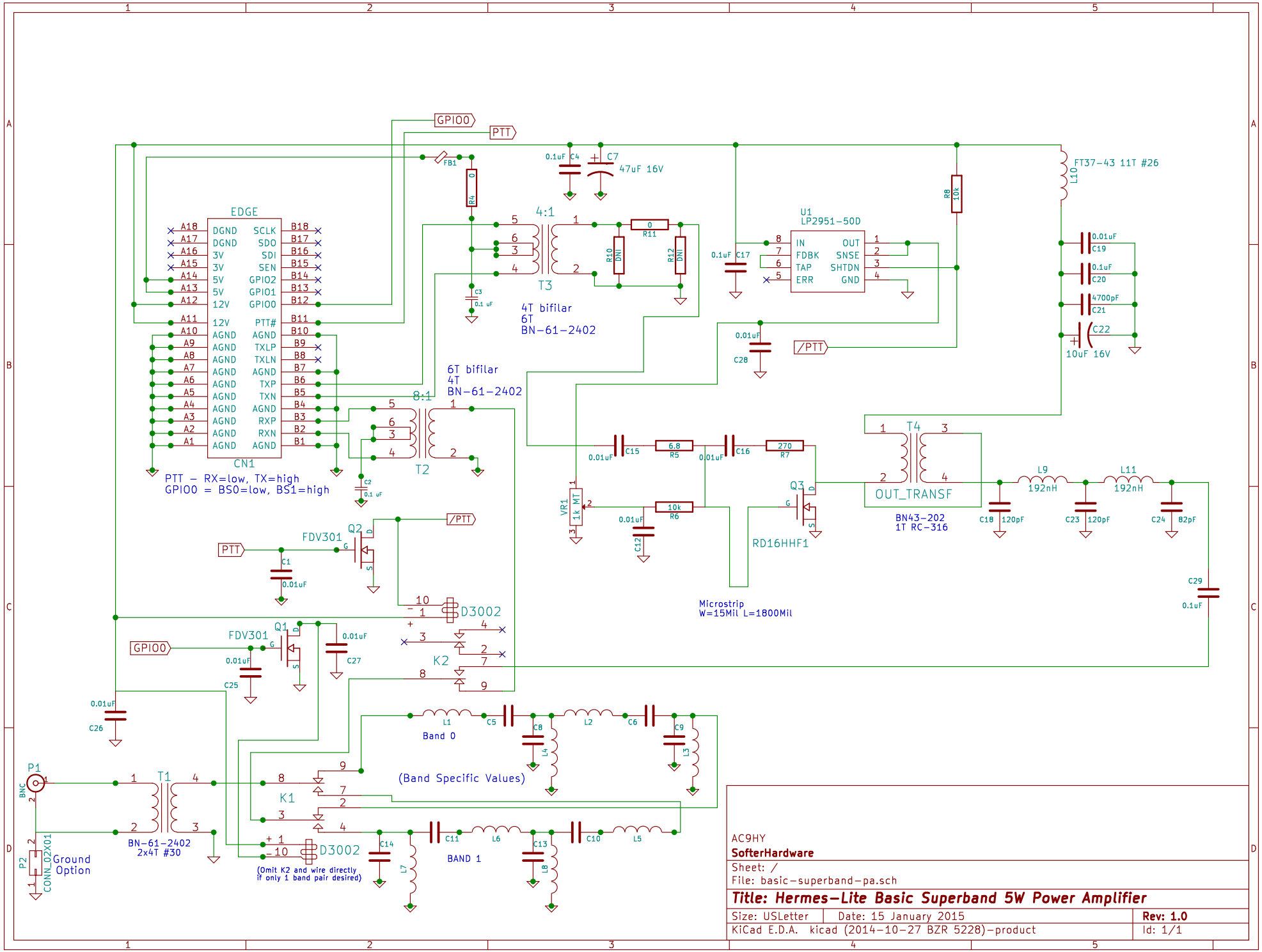
GPIO0
PTT
FB1
R4 0
0.1uF C4
C7 47uF 16V
EDGE
CN1
PTT – RX=low, TX=high
GPIO0 = BS0=low, BS1=high
4:1
T3
R11 0
R10 DNI
R12 DNI
C3 0.1 uF
4T bifilar
6T
BN-61-2402
6T bifilar
4T
BN-61-2402
8:1
T2
C2 0.1 uF
U1
LP2951-50D
0.1uF C17
0.01uF C28
/PTT
R8 10k
FT37-43 11T #26
L10
0.01uF C19
0.1uF C20
4700pF C21
C22 10uF 16V
0.01uF C15
6.8 R5
0.01uF C16
270 R7
VR1 1k MT
10k R6
0.01uF C12
Q3
RD16HHF1
T4
OUT_TRANSF
BN43-202
1T RC-316
L9 192nH
L11 192nH
C18 120pF
C23 120pF
C24 82pF
C29 0.1uF
Microstrip
W=15Mil L=1800Mil
FDV301 Q2
PTT
C1 0.01uF
/PTT
D3002
FDV301 Q1
GPIO0
0.01uF C25
0.01uF C27
K2
0.01uF C26
L1
C5
C8
L2
C6
C9
L4
L3
Band 0
(Band Specific Values)
P1
BNC
T1
K1
BN-61-2402
2x4T #30
P2
CONN_02X01
Ground
Option
D3002
(Omit K2 and wire directly
if only 1 band pair desired)
C14
L7
C11
L6
C13
L8
C10
L5
BAND 1
AC9HY
SofterHardware
Sheet: /
File: basic-superband-pa.sch
Title: Hermes-Lite Basic Superband 5W Power Amplifier
Size: USLetter
Date: 15 January 2015
Rev: 1.0
KiCad E.D.A. kicad (2014-10-27 BZR 5228)-product
Id: 1/1