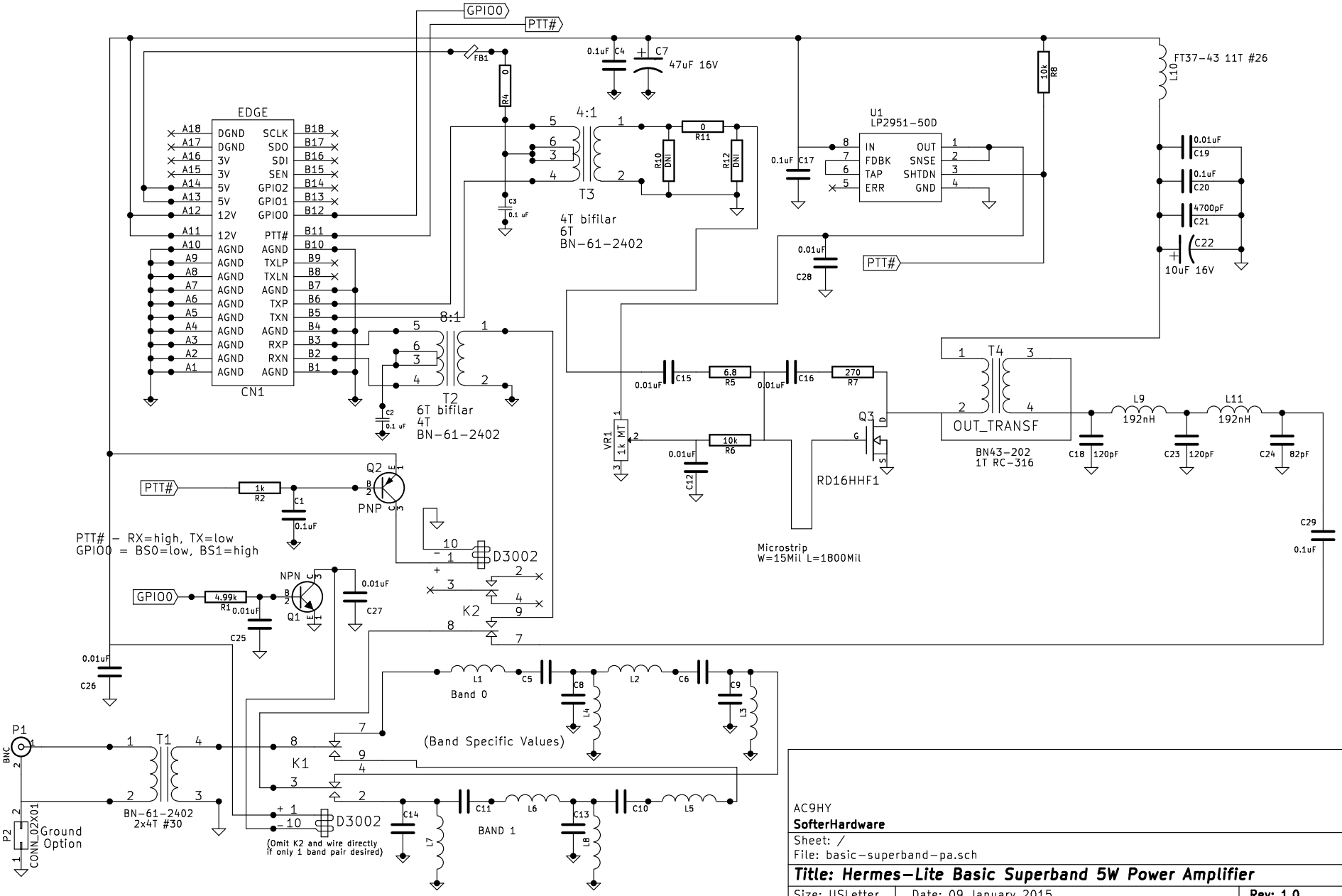

AC9HY

SofterHardware

Sheet: /

File: basic-superband-pa.sch

Title: Hermes-Lite Basic Superband 5W Power Amplifier

Size: USLetter	Date: 09 January 2015	**Rev: 1.0**
KiCad E.D.A. kicad (2014-10-27 BZR 5228)-product		Id: 1/1