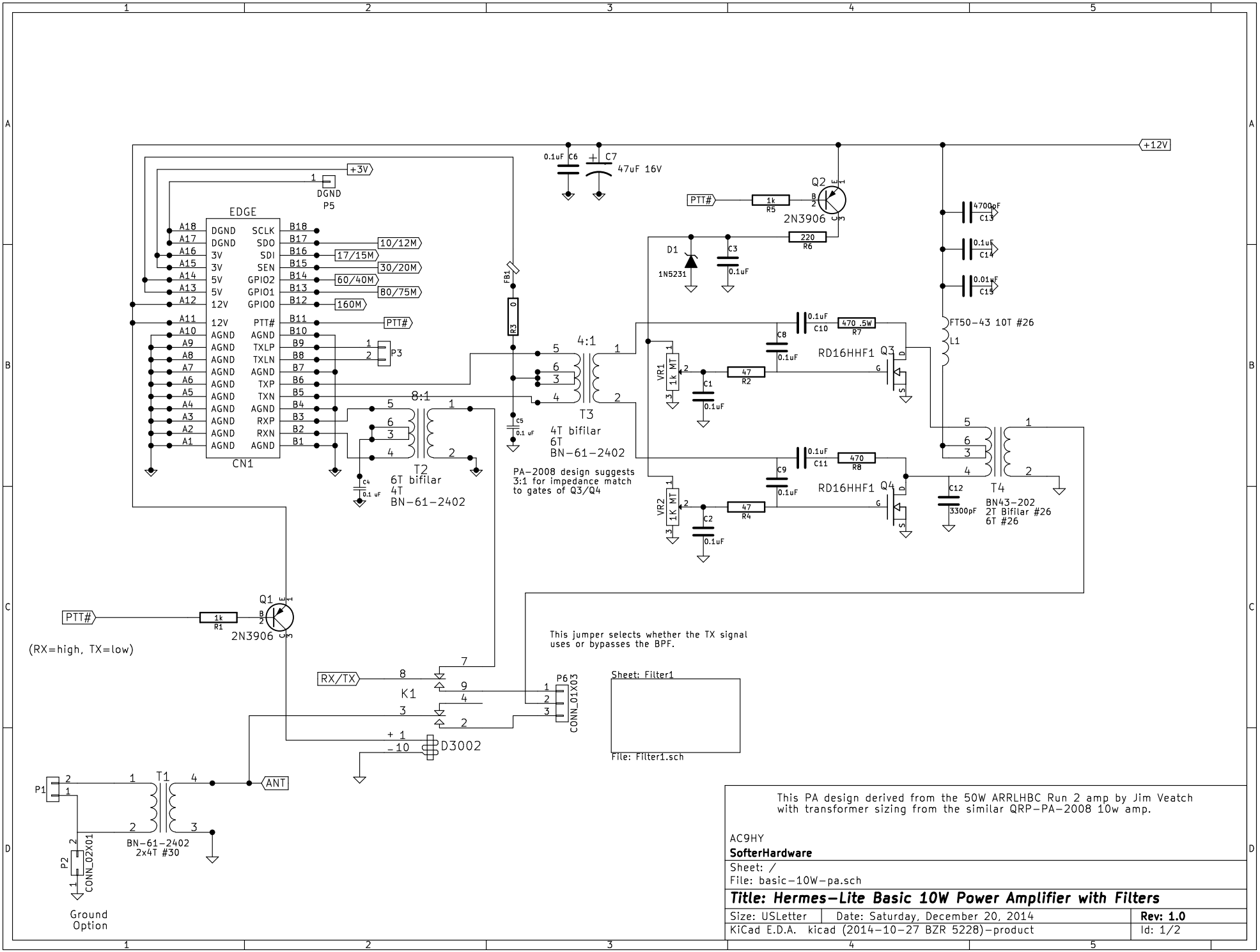

This PA design derived from the 50W ARRLHBC Run 2 amp by Jim Veatch with transformer sizing from the similar QRP-PA-2008 10w amp.

AC9HY

SofterHardware

Sheet: /

File: basic-10W-pa.sch

Title: Hermes-Lite Basic 10W Power Amplifier with Filters

Size: USLetter	Date: Saturday, December 20, 2014	**Rev: 1.0**
KiCad E.D.A. kicad (2014-10-27 BZR 5228)-product		Id: 1/2

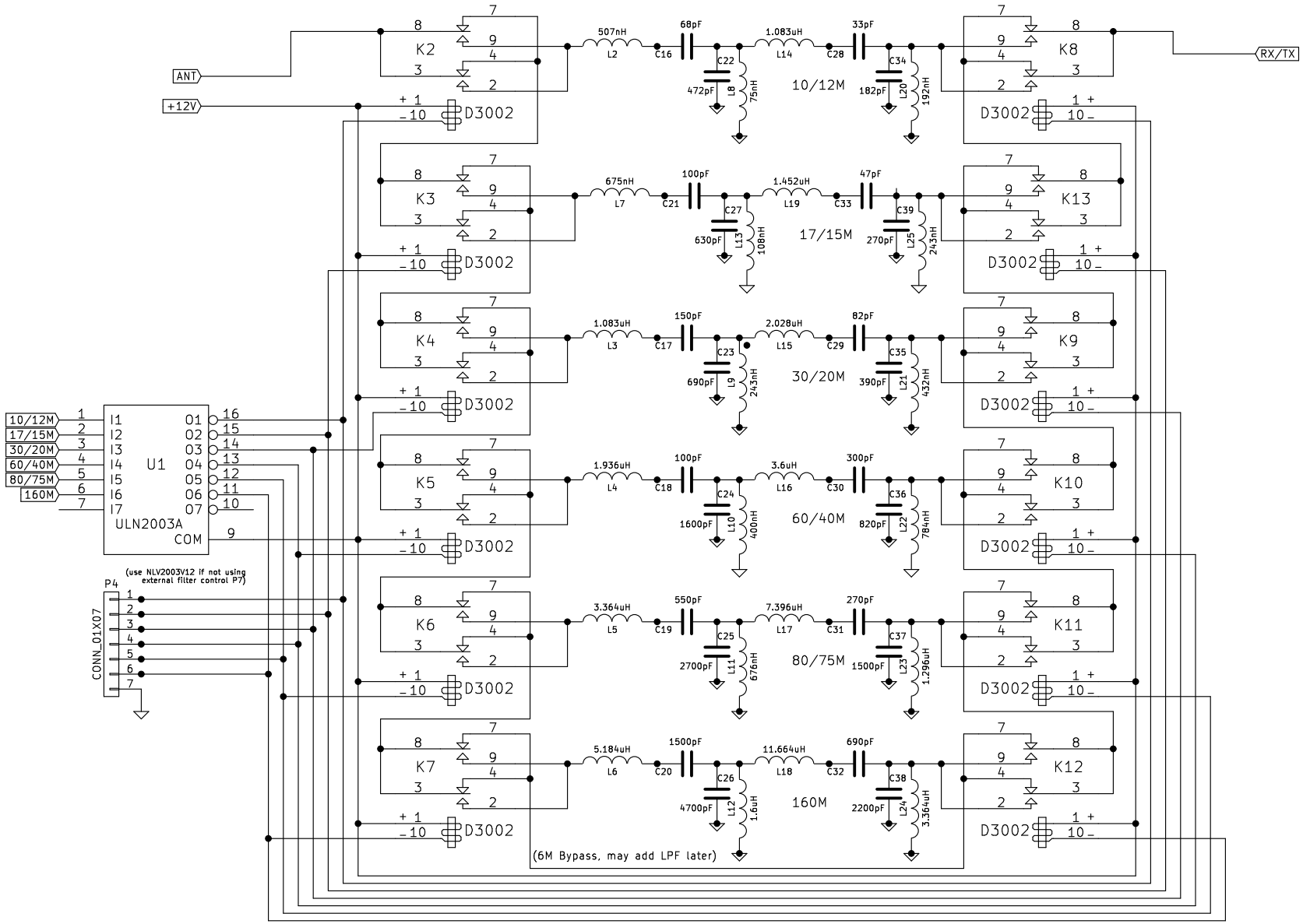

This filter board uses BPF filters that are functional for both TX and RX. Thus there is not a general receive capability, although the gaps are not that severe. See filter graphs.

AC9HY

SofterHardware

Sheet: /Filter1/

File: Filter1.sch

Title: Hermes-Lite Basic Filter 160m-6m

Size: USLetter	Date: Saturday, December 20, 2014	**Rev: 1.7**
KiCad E.D.A. kicad (2014-10-27 BZR 5228)-product		Id: 2/2