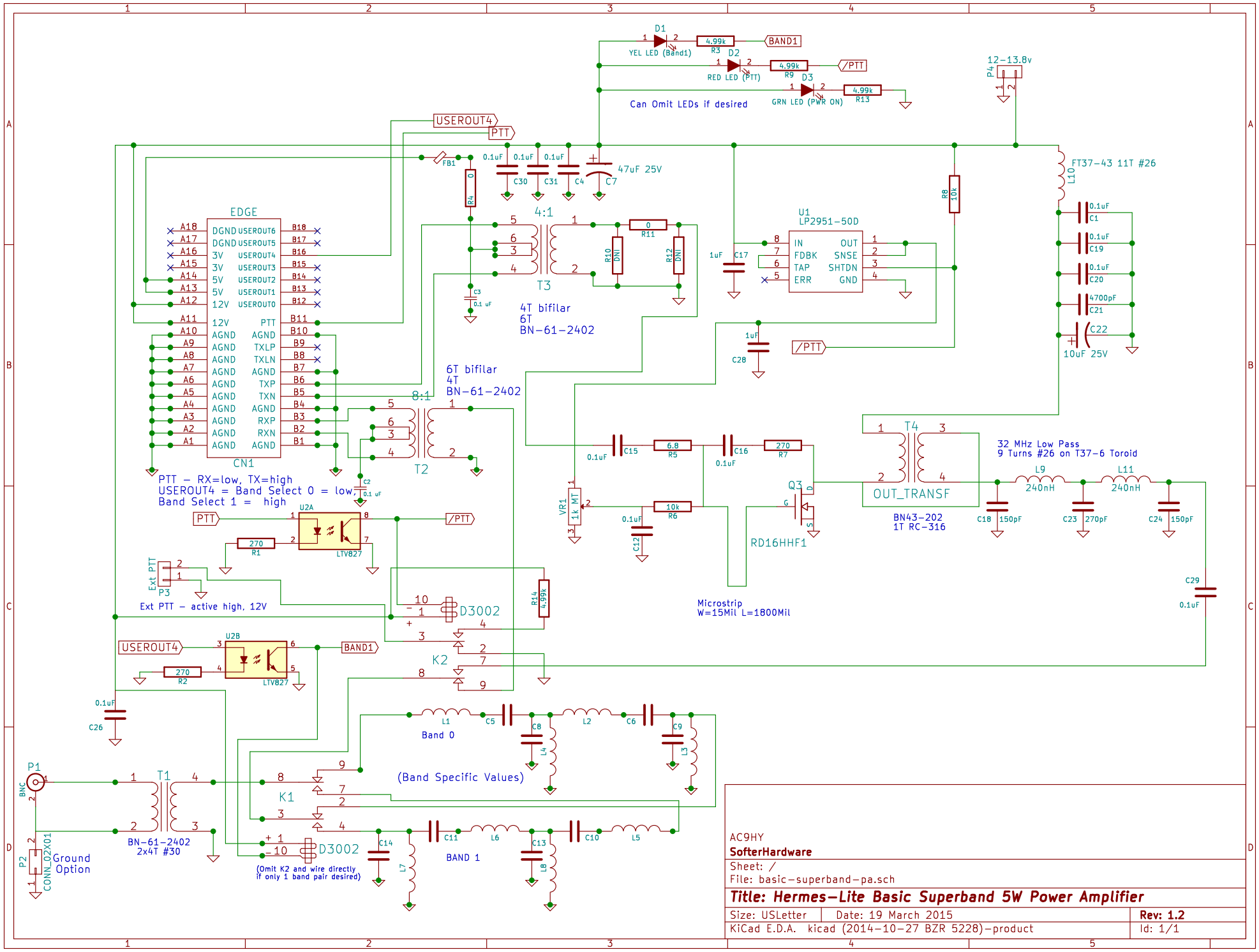
D1
YEL LED (Band1)
4.99k
R3
BAND1
D2
RED LED (PTT)
4.99k
R9
/PTT
D3
GRN LED (PWR ON)
4.99k
R13
Can Omit LEDs if desired
12-13.8v
P4
USEROUT4
PTT
FB1
0
R4
0.1uF
C30
C31
C4
47uF 25V
C7
FT37-43 11T #26
L10
R8
10k
EDGE
CN1
A18 DGND USEROUT6 B18
A17 DGND USEROUT5 B17
A16 3V USEROUT4 B16
A15 3V USEROUT3 B15
A14 5V USEROUT2 B14
A13 5V USEROUT1 B13
A12 12V USEROUT0 B12
A11 12V PTT B11
A10 AGND AGND B10
A9 AGND TXLP B9
A8 AGND TXLN B8
A7 AGND AGND B7
A6 AGND TXP B6
A5 AGND TXN B5
A4 AGND AGND B4
A3 AGND RXP B3
A2 AGND RXN B2
A1 AGND AGND B1
4:1
T3
0
R11
R10
DNI
R12
DNI
C3
0.1 uF
4T bifilar
6T
BN-61-2402
U1
LP2951-50D
IN
FDBK
TAP
ERR
OUT
SNSE
SHTDN
GND
1uF
C17
1uF
C28
/PTT
C1
C19
C20
C21
4700pF
C22
10uF 25V
6T bifilar
4T
BN-61-2402
8:1
T2
C2
0.1 uF
PTT - RX=low, TX=high
USEROUT4 = Band Select 0 = low,
Band Select 1 = high
U2A
LTV827
270
R1
Ext PTT
P3
Ext PTT - active high, 12V
0.1uF
C15
6.8
R5
C16
0.1uF
270
R7
VR1
1k MT
10k
R6
0.1uF
C12
Q3
RD16HHF1
T4
OUT_TRANSF
BN43-202
1T RC-316
32 MHz Low Pass
9 Turns #26 on T37-6 Toroid
L9
240nH
L11
240nH
C18
150pF
C23
270pF
C24
150pF
C29
0.1uF
Microstrip
W=15Mil L=1800Mil
R14
4.99k
D3002
U2B
LTV827
270
R2
K2
0.1uF
C26
L1
C5
C8
L2
C6
C9
L4
L3
Band 0
(Band Specific Values)
K1
P1
BNC
T1
BN-61-2402
2x4T #30
P2
CONN_02X01
Ground
Option
D3002
(Omit K2 and wire directly
if only 1 band pair desired)
C14
L7
C11
L6
C13
L8
C10
L5
BAND 1
AC9HY
SofterHardware
Sheet: /
File: basic-superband-pa.sch
Title: Hermes-Lite Basic Superband 5W Power Amplifier
Size: USLetter
Date: 19 March 2015
Rev: 1.2
KiCad E.D.A. kicad (2014-10-27 BZR 5228)-product
Id: 1/1