1008220

Lynk & Co
International AB
Gothenburg, Sweden

VEHICLE CONDITION REPORT

MUST be completed at time transit damage is identified.

LYNK&CO

1. Model	2. Vehicle Identification Number (VIN)

3. Location codes

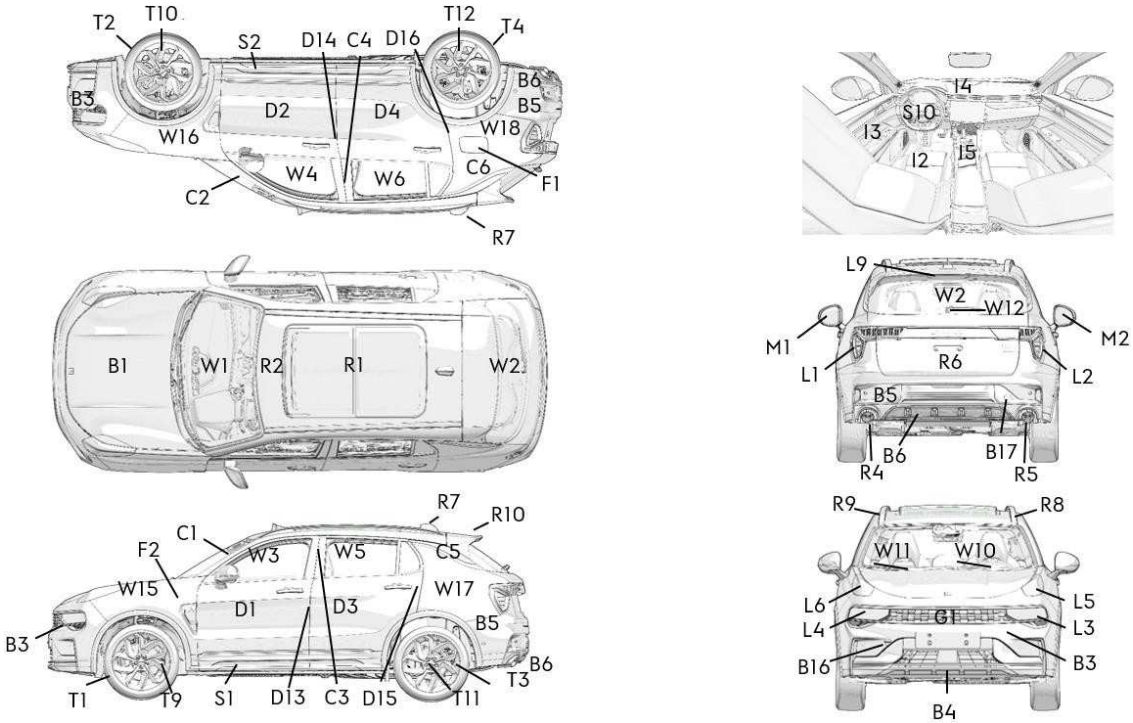

4. Damage codes and descriptions

Code	GB	SE	DE	FR	IT	ES	NL	CN
13	Puncture	Punktering	Reifenpanne	Percement crevaison	Pneumatico forato	Perforación	Lekke band	被刺穿，被戳破
27	Dent	Buckla	Beule	Bosse	Ammaccatura	Abolladura	Deuk	凹痕
28	Scratch	Repa	Kratzer	Rayure	Graffio	Arañazo	Kras	擦伤，划痕
29	Paint ship	Lackavslag	Lackspritzer	Défaut de peinture	Vernice scheggiata	Pintura desportillada	Lakpunt	漆点飞溅
53	Missing	Saknas	Fehlteile	Manquant	Mancanze	Faltante	Ontbreekt	丢失，遗失
82	Broken	Avbruten	Abgebrochene Teile	Cassé	Rottura di pezzo	Roto	Stuk	破损
99	Factory fault	Produktionsfel	Werksfehler	Défaut usine	Difetto di fabbricazione	Fallos de fábrica	Fabriekenfout	工厂质量缺陷

5. Location code	6. Damage code	7. Full vehicle cover damaged?	8. Additional notes
		☐ YES	
		☐ NO	

A 9. Hand-over from		➔ Company type	10. Hand-over to
(a) Transport ref. (vessel name, truck reg, train code, plan nr)			(a) Transport ref. (vessel name, truck reg, train code, plan nr)
(b) Company			(b) Company
(c) Name			(c) Name
(d) Signature & stamp			(d) Signature & stamp
(e) Date	(f) City		(e) Date / (f) City

Company type	
☐ Factory	☐ Factory
☐ Air	☐ Air
☐ Road	☐ Road
☐ Distribution	☐ Distribution
☐ Rail	☐ Rail
☐ Body builder	☐ Body builder
☐ Sea	☐ Sea
☐ Retailer	☐ Retailer

INSPECTED BY www.carconsulting.com

IMPORTANT: Reservations at delivery must appear on the freight document.
Please use VCR (this document) as a support to detail noticed damages.Top page must stay in chassis.
www.lynkco.com