SIEMENS

Desigo™

Automation stations

PXC7

To automate building automation and control systems

- Modular automation station and system controller for HVAC and building automation and control systems
- BACnet/IP communication (BTL certified)
- BACnet Secure Connect communication
- IEEE 802.1X port-based authentication with EAP-TLS method
- Comprehensive management and system functions
- Freely programmable automation stations for maximum flexibility
- Connects TXM input/output modules
- Flexible use of Ethernet ports (network separation)
- KNX PL-Link bus to connect RDG2..KN room thermostats, sensors, and operator units (including bus power)
- Integration of M-bus energy meters directly (integrated mini power supply) or via RS485 level-converter
- Integration of Modbus data points via RTU and / or TCP
- Integration of BACnet MS/TP devices
- WLAN interface for engineering and commissioning
- Operating voltage AC or DC 24 V
- Mounted on standard rails or on the wall
- Building X integration

Functions

Optimized, flexible automation station for HVAC and building automation and control systems.

- System functions (alarming, scheduling, trending, access protection with individually definable user profiles and categories)
- System controller for system networks with PXC3, PXC4, PXC5, PXC7 and DXR controllers over BACnet/IP, BACnet/SC, or BACnet MS/TP
- Integrates data points and/or subsystems via Modbus RTU and/or Modbus TCP
- Integrates MS/TP devices
- Integration of wired M-bus meters via RS485 level-converter or onboard M-bus interface (EN 13757-2):
  - Offline and/or online engineering with ABT Site. No additional M-bus tool required
  - Primary and/or secondary device addressing
- The following functions are available with KNX PL-Link bus:
  - Communication with RDG2..KN room thermostats, sensors, and operator units
  - Plug-and-play connection of Siemens field devices with KNX PL-Link
- Integrated power supply for TX-IO modules
- Integrated AC/DC 24 V power supply for field devices (e.g. actuators and sensors)
- Engineering and commissioning with the ABT Site Tool using graphical function charts
- Freely programmable. All function blocks, available in libraries, can be graphically connected.
- BTL tested BACnet communication on IP (BACnet/IP or BACnet/SC) or BACnet MS/TP, in compliance with the BACnet standard including B-BC profile (Rev. 1.23)
- IT security including HTTPS, IEC-62443 4-2 (Security Level 2*), and BACnet Secure Connect
- BACnet Secure Connect support as BACnet/SC hub
- Supports the flexible use of the Ethernet ports with the activation of the WAN port starting from device version 1.6 onwards.
  - Allows the separation of secure and unsecured networks.
  - Each port receives a separate MAC address resulting in higher security (not applicable for existing devices, only for new devices).
- Generic operation via embedded web interface
- Direct cloud connectivity with Building X for remote access, data points time series, and data points commanding (changing state, writing setpoints, commanding outputs, etc.). BACnet alarms are forwarded to the cloud with automatic notifications via e-mail or SMS.
- 2-port Ethernet switch for low-cost cabling
- IEEE 802.1X port-based authentication with EAP-TLS method requiring mutual authentication with digital certificates between the authentication server (RADIUS) and the supplicant (PXC7)
- WLAN interface for engineering and commissioning
- Dual-stack IPv4/IPv6 support to handle both IPv4 and IPv6 protocols simultaneously.
- Operating voltage AC 24 V or DC 24 V
- DIN rail or screw mounting
- Plug-in screw terminal blocks

* For details about network and physical setup, refer to the Desigo Products Cybersecurity Guidelines (A6V14142297).

Type summary

Standardized hardware

PXC7.E400S, M, and L are based on the same hardware, and all have the same look and feel. Interfaces like RS485 are enabled and disabled according to the type specification.

PXC7 variants	E400S [1]	E400M [1]	E400L [1]
Order number	S55375-C111 [2]	S55375-C110 [2]	S55375-C105 [2]
Number of TXM inputs and outputs	up to 100	up to 200	up to 400
Total number TXM inputs and outputs and integration data points (M-bus, Modbus TCP and / or RTU)	100 [3]	250 [3]	600 [3]
Number of digital inputs for potential-free contacts for signaling functions NO or NC (onboard)	1	1	1
Number of BACnet/SC devices connected as nodes	up to 100 [4]	up to 100 [4]	up to 100 [4]
Number of BACnet MS/TP devices in a field level network	up to 60 [5]	up to 120 [5] (2 x 60)	up to 240 [5] (4 x 60)
Number of KNX PL-Link devices	up to 64	up to 64	up to 64
Number of configurable RS485 interfaces either for integration of Modbus RTU, BACnet MS/TP, or M-bus	1	2	4

[1] For PXC7.E400L-N, see data sheet A6V13454994

[2] For details on engineering, see PXC4, PXC5 & PXC7 Planning overview (A6V13054435).

[3] KNX PL-Link data points do not count as integration points. For KNX PL-Link, only the limits on BACnet objects are considered.

[4] A hub should not only be connected to 10 Mbps Ethernet trunks.

[5] Depending on the behavior of the third-party MS/TP devices.

Onboard inputs

DI	Digital inputs for potential-free contacts for signaling functions (NO, NC)

TXM I/O modules

Description	Type [1]	Data sheet
Digital input module 8 or 16 I/O points	TXM1.8D, TXM1.16D	CM2N8172
Universal module without / with local operation and LCD	TXM1.8U, TXM1.8U-ML	CM2N8173
Super universal module without / with local operation and LCD	TXM1.8X, TXM1.8X-ML	CM2N8174
Relay module without / with local operation	TXM1.6R, TXM1.6R-M	CM2N8175
Resistance measuring module (for Pt100 4-wire)	TXM1.8P	CM2N8176
Triac module (only if PXC7.E400 is powered with AC)	TXM1.8T	CM2N8179
Digital input and relay module	TXM1.4D3R	CM2N8188
Power module	TXS1.12F10	CM2N8183
Bus connection module	TXS1.EF10	CM2N8183
Island bus extension module	TXA1.IBE	CM2N8184

[1] Module series B and higher. In following use cases only series D can be used (available as of 2012):

- I/O bus communication mode "Event"

PXC7 can power TXM extensions modules (see Interfaces [▶ 9]).
For further details see PXC4, PXC5 & PXC7 Planning overview (A6V13054435) and data sheets.

KNX PL-Link devices

Description	Type	Data sheet
Wall-mounted temperature sensor	QMX3.P30	CM2N1602
Wall-mounted temperature and humidity sensor	QMX3.P40	
Wall-mounted temperature, humidity, and CO_2 sensor	QMX3.P70	
Wall-mounted temperature sensor and room operator unit	QMX3.P34	
Wall-mounted temperature and humidity sensor and room operator unit	QMX3.P44	
Wall-mounted temperature, humidity, and CO_2 sensor and room operator unit	QMX3.P74	
Wall-mounted temperature sensor	QMX6.P30	A6V16053428
Wall-mounted temperature and humidity sensor	QMX6.P40	
Wall-mounted temperature, humidity, and CO_2 sensor	QMX6.P70	
Wall-mounted temperature sensor and room operator unit	QMX6.P34	
Wall-mounted temperature and humidity sensor and room operator unit	QMX6.P44	
Wall-mounted temperature, humidity, and CO_2 sensor and room operator unit	QMX6.P74	
Wall-mounted temperature sensor and room operator unit	QMX2.P33	A6V10733768
Wall-mounted temperature and humidity sensor and room operator unit	QMX2.P43	
Flush-mounted room sensors base and front modules: ● Base module for temperature and / or humidity measurement [1)] ● Base module for CO2 measurement [1)] ● Front module for base module without sensor ● Front module for base module with temperature sensor ● Front module for base module with humidity and temperature sensor ● Front module for base module with humidity, temperature sensor, and CO2 indicator LED	● AQR2570 ● AQR2576 ● AQR2530NNW ● AQR2532NNW ● AQR2535NNW ● AQR2535NNWQ	CE1N1411
Passive infrared presence detector	UP 258D12	A6V10489489
Presence detector WIDE with temperature sensor	UP 258D31	A6V11894530
Presence detector WIDE with temperature and humidity sensor	UP 258D41	
Presence detector WIDE with temperature, humidity, and CO2 sensor	UP 258D51	
Presence detector WIDE with temperature sensor and ultrasound	UP 258D61	
Room thermostat with temperature and humidity sensor	RDG200KN RDG260KN	A6V11545853
Room thermostat with temperature, humidity, and CO2 sensor	RDG204KN RDG264KN	

[1)] Physical data points on the base module AQR257.. for use in HVAC functions:
- 2 x Binary potential-free contacts (NO, NC)
- 1 x Passive sensor NTC10K (Type II / Beta (0-50 °C) = 3892 K)

For details see PXC4, PXC5 & PXC7 Planning overview (A6V13054435) and data sheets.

Desigo Control Point

Description	Type	Data sheet
BACnet touch panels with integrated data storage and web server functionality: 7.0 " 10.1 " 15.6 "	 PXM30.E PXM40.E PXM50.E	A6V11664137
TCP/IP client touch panels with data storage in web server PXG3.Wx00-2: 7.0 " 10.1 " 15.6 "	 PXM30-1 PXM40-1 PXM50-1	A6V11664139
BACnet/IP web server with standard functionality BACnet/IP web server with extended functionality	PXG3.W100-2 PXG3.W200-2	A6V12304192

Technical and mechanical design

The compact build allows for mounting the devices on a standard rail or a wall.

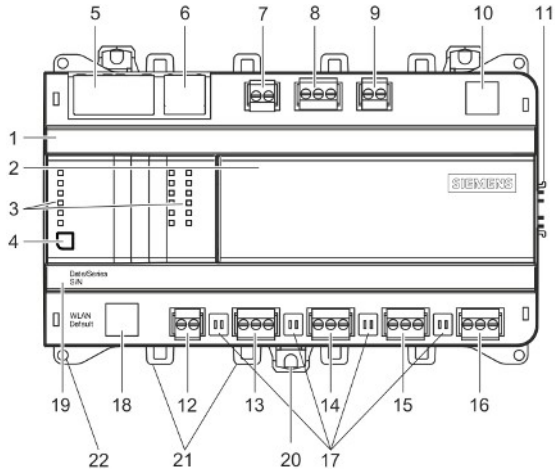

7	Plug-in terminal block with screw terminals KNX PL-Link
8	Plug-in terminal blocks with screw terminals Power supply
9	Plug-in terminal block with screw terminals Digital input
10	Data matrix code
11	Connection for TXM modules (island bus)
12	Plug-in terminal block with screw terminals M-bus
13 14 15 16	Plug-in terminal block with screw terminals (M-bus, Modbus, or MS/TP) COM1 interface COM2 interface COM3 interface COM4 interface Activation of COM 1/2/3/4 depending on Type (S,M,L)

1	Plastic housing	17	DIP switches for bus termination and polarization COM
2	Battery cover	18	QR code for default WLAN access Description see Technical data [▸ 8]
3	LEDs for communication and state	19	Date/series and serial number
4	Service button (ID on network and WLAN on/off)	20	Slider for mounting on DIN rails
5	LAN: 2-port Ethernet switch (with 2 LEDs per port for display purposes)	21	Eyelets for cable ties
6	WAN: Ethernet port (with 2 LEDs for display purposes)	22	Holes for wall mounting

LED displays

Activity	LED	Color	Activity	Function
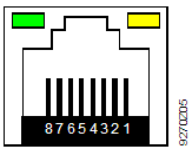	Ethernet	Green	Steady ON Steady OFF Flashing	Link active No connection Network traffic
		Yellow	Steady ON Steady OFF	Link 100 Mbps Link 10 Mbps
RUN ☁ BAT TXM SVC WLAN	RUN	Green	Steady ON Steady OFF Flashing	Device operational Device not operational Start-up or program stop
		Red	Steady OFF Steady ON Rapid flashing	OK HW or SW fault Firmware or application missing/corrupted
	☁	Blue	Steady ON Blinking Steady OFF	Cloud connection OK Cloud connection enabled but no connection available Cloud connection disabled
	BAT	Red	Steady OFF Steady ON	Optional battery OK Optional battery empty - replace
	TXM	Yellow	Flashing Steady OFF	Communication No communication with TXM modules
	SVC	Red	Steady OFF Flashing	OK Device not configured
			Flashing after wink command	Device ID after receipt of wink command
			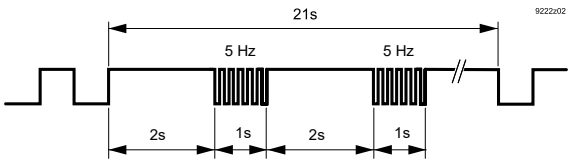	
	WLAN	Blue	Steady OFF Steady ON Flashing	WLAN inactive WLAN active and at least one WLAN client connected WLAN active and no WLAN client connected
TX RX COM1 COM2 COM3 COM4 KNX MBUS	COM…	Yellow	Flashing Steady OFF	Communication (TX: Transmit, RX: Receive) No communication to subsystem
	KNX	Yellow	Flashing Steady OFF	Communication (TX: Transmit, RX: Receive) No communication to subsystem
	M-bus	Yellow	Flashing Steady OFF	Communication (TX: Transmit, RX: Receive) No communication to subsystem
SVC	Service button		Press 0.2 ... 1 s	ID in the network
			Press 1 ... 3 s	WLAN enable/disable WLAN disables automatically after 10 minutes if no client is connected
			Factory reset	1. Power off the device. 2. Power on the device. 3. Wait until all LEDs light up and turn off again, then press the Service button. 4. Keep the Service button pressed until all LEDs light up, then release the button. All LEDs go off, the device restarts. 5. Wait until the device has fully started – unconfigured (green RUN LED and red SVC LED are flashing)

Product documentation

Related documents such as the environmental declarations, declarations of conformity, etc., can be downloaded from the following Internet address:

www.siemens.com/bt/download

Notes

Safety

⚠ CAUTION	
	National safety regulations Failure to comply with national safety regulations may result in personal injury and property damage. ● Observe national regulations and comply with the appropriate safety regulations.

Mounting position and ambient temperature

The devices can be snapped onto standard rails or screwed onto a flat surface.

Plug-in screw terminals connect power and interfaces.

Ambient temperature -5...50 °C (23...122 °F)	Ambient temperature -5...45 °C (23...113 °F)
● Wall, horizontal – From left to right – From right to left	● Overhead ● Wall, vertically – From top to bottom – From bottom to top ● On a horizontal surface

Installation

⚠ WARNING	
	Electric shock Incorrect installation of the device may lead to electric shock injuries when touching the device! ● Install the device in a lockable cabinet or use terminal covers. ● Do not install the device in locations where children are likely to be present. ● Conductors with a cross-section of 0.5 mm^2 (AWG24) or greater shall comply with the requirements of IEC 60332-1-2 and IEC 60332-1-3 or IEC TS 60695-11-21.

Disposal

	This symbol or any other national label indicates that the product, its packaging, and, where applicable, any batteries may not be disposed of as domestic waste. Delete all personal data and dispose of the item(s) at separate collection and recycling facilities in accordance with local and national regulations. For additional details, refer to Siemens information on disposal.

Warranty

Technical data on specific applications are only valid together with Siemens products listed under "Equipment combinations". Siemens rejects any and all warranties in the event that third-party products are used.

Technical data

Power supply

Operating voltage AC 24 V (24 V≃, ⊥, ⏚)	AC 24 V -15 / +20 % (PELV) AC 24 V Class 2 (US) 48…63 Hz
Operating voltage DC 24 V (24 V≃, ⊥, ⏚)	DC 24 V -15 / +20 % (PELV) DC 24 V Class 2 (US)
Functional ground (US) Functional earth ⏚	The terminal for the functional ground must be connected on the installation side with the building grounding system (PE).
Screw terminals for wire cross sections up to	Max. 2.5 mm^2 (14 AWG)
Internal fusing	4 A irreversible / non-replaceable
External supply line fusing (EU)	Non-renewable fuse max. 10 A slow-blow or circuit breaker max. 13 A Tripping characteristic B, C, D per EN 60898 or Power supply with current limitation of max. 10 A
Protection	Reverse connection protection for DC 24 V

Power consumption (for transformer / power supply planning)

	Operating voltage AC 24 V	**Operating voltage DC 24 V**
Full load	71 VA / 3.0 A	66 W / 2.8 A
Base load (without loading by I/O modules TXM, KNX PL-Link, M-bus, and field devices)	15.4 VA / 0.64 A	7.8 W / 0.33 A
I/O modules TXM supply	15 VA / 0.6 A	8 W / 0.3 A
KNX PL-Link supply	4 VA / 0.17 A	2.2 W / 0.09 A
M-bus supply	3 VA / 0.13 A	1.7 W / 0.07 A
Field device supply V~	Max. 2 A, total of the connected field devices < 48 VA / 48 W	

Function data

Hardware information	
Processor	NXP i.MX8 QuadXPlus, 1.2 GHz
Storage	2 GByte RAM 8 GByte eMMC

Data retention in the event of power failure
Energy reserve (supercapacitor) to support real-time clock (7 days). Energy reserve to support real-time clock can be extended using optional battery BR2032: depending on the life time of the battery and use, typically 10 years. *(Battery safety requirement and specification for BR2032 according to IEC 60086-4 or UL1642.* *Battery must be rated for ambient temperature 85 °C (185 °F))* Low power of battery will be indicated by LED and a system alarm will be generated.
In case of a power failure, trend log data is retained.

Interfaces

Ethernet interface	
Plug	3 x RJ45, shielded
Interface type	10Base-T / 100Base-TX, IEEE 802.3 fully compliant
Bit rate	10/100 Mbps, autosensing
Supported standards EAP method	IEEE 802.1X TLS
Protocol	BACnet/IP on UDP/IP, BACnet/SC on TCP/IP, and HTTPS on TCP/IP WAN port does not support BACnet/SC connections
Cabling (in-house cabling only), cable type	10 Mbps: Min. CAT3, shielded cable is recommended 100 Mbps: Min. CAT5, shielded cable is recommended
Cable length	Max. 100 m (330 ft)

The COM interfaces can be used either for M-bus, Modbus, or for MS/TP, according to type and configuration.

M-bus interface on COM interface (RS485)	
Interface type	EIA-485, electrically isolated
Baud rate	300, 600, 1200, 2400, 4800, 9600, 19200, 38400. The maximum baud rate is depending on the configuration of M-bus-S devices (subordinate devices) and M-bus repeater.
Internal bus termination	120 Ohm, switchable with DIP switch
Internal bus polarization	270 Ohm pull-up/pull-down resistances, switchable with DIP switch
Cabling (in-house cabling only)	3-wire cable, shielded cable recommended (shield must be connected to building earth in the mounting panel)
Cable length	Max. 1000 m (3300 ft)
Protection	Short-circuit proof Protection against faulty wiring with AC 24 V and DC 24 V
M-bus level converter including power supply (required)	Configuration examples (simple M-bus loads à 1.5 mA): ● Up to 2 M-bus devices: STV Electronic, MPW-2 [1] ● Up to 6 M-bus devices: STV Electronic, MPW-6 [1] ● Up to 60 M-bus devices: Relay GmbH, PW60 [1] ● Up to 250 M-bus devices: Siemens, WTX631-GA0090

[1] For STV Electronic level converters, refer to https://www.stv-electronic.de/. For Relay GmbH level converters, refer to https://www.relay.de/.
The use of these products is a recommendation only. Siemens cannot guarantee functionality nor take over any warranty for third-party products. This information is subject to change without notice.

Modbus RTU interface	
Interface type	EIA-485, electrically isolated
Baud rate	300, 600, 1200, 2400, 4800, 9600, 19200, 38400, 57600, 76800, 115200 (depending on the configuration)
Internal bus termination	120 Ohm, switchable with DIP switch
Internal bus polarization	270 Ohm pull-up/pull-down resistances, switchable with DIP switch
Cabling (in-house cabling only)	3-wire cable, shielded cable recommended (shield must be connected to building earth in the mounting panel)
Cable length	Max. 1000 m (3300 ft)
Protection	Short-circuit proof Protection against faulty wiring with AC 24 V and DC 24 V

BACnet MS/TP interface	
Interface type	EIA-485, electrically isolated
Baud rate	9600, 19200, 38400, 76800, 115200 (depending on the configuration)
Internal bus termination	120 Ohm, switchable with DIP switch
Internal bus polarization	270 Ohm pull-up/pull-down resistances, switchable with DIP switch
Cabling (in-house cabling only) Distance between 2 devices Length of the MS/TP line	3-wire cable, shielded Max. 500 m (1650 ft) Max. 1000 m (3300 ft)
Protection	Short-circuit proof Protection against faulty wiring with AC 24 V and DC 24 V

WLAN interface	
Interface type	Wireless access point
Supported standards Frequency band WLAN channels Maximum radio-frequency power	IEEE 802.11b/g/n 2.412…2.462 GHz 1…11 16.4 dBm
Distance (unobstructed field)	Min. 5 m (16 ft)
Device pairing	Activation / deactivation with service button Automatic switch off after 10 minutes if no WLAN-client is connected. Optionally, for cyber security reasons, the WLAN can be permanently disabled via configuration.
Default SSID and WLAN password: Scan the QR code. It will display something like WIFI:S:**PXC7.E400_0000550**;T:WPA;P:**1400052738**;; Then SSID = PXC7.E400_0000550 and password = 1400052738 Determine manually: Use the information from the Date/Series/SN block It will display something like: Date/Series: 20210423**0000550** S/N: **1400052738** SSID = <ASN>_<Running number after the series letter> and password = <S/N>	

M-bus manager with integrated power supply	
Interface type	M-bus manager according to EN 13757-2 for max. 7.5 mA, galvanically isolated Max. 4 M-bus meters as subordinates (4 simple M-bus loads à 1.5 mA)
Baud rate	300, 2400 (default), 9600. The maximum baud rate is depending on M-bus device configuration and M-bus repeater.
Cabling (in-house cabling only)	2-wire cable, interchangeable according to M-bus standard
Cable length	Max. 100 m (330 ft)
Protection	Short-circuit proof Protection against faulty wiring with AC 24 V and DC 24 V
M-bus level converter used as repeater (optional) to extend number of connected M-bus-S devices	Configuration examples (simple M-bus loads à 1.5 mA): ● Up to 60 M-bus-S devices: WTV531-GA5060 ● Up to 250 M-bus-S devices: WTX631.GA0090

ABT Site checks the number of data points and not the number of M-bus-S devices. The max. number of devices per network depends on the individual load of each device and the given power supply by the M-bus manager (PXC4/5/7) or converter.

KNX PL-Link interface	
Type	KNX TP1 PL-Link, galvanic isolation Baud rate: 9.6 kbps
Cabling (in-house cabling only)	2-wire cable, 0.75 mm^2 / AWG20 or 1 mm^2 / AWG18
Cable length	With internal supply: Max. 80 m (262 ft) With external supply: Max. 1000 m (3300 ft)
Internal bus power	Max. 50 mA When using external bus power for KNX PL-Link, switch off the internal bus power via the ABT Site Tool.

I/O modules TXM bus interface	
Nominal voltage	DC 24 V
Supply current for I/O modules TXM	Max. 300 mA
Connectable in parallel with DC 24 V power supply module TXS1.12F4	For details, see: TX-I/O- engineering and installation, CM110562
Protection	Short-circuit proof
TXM I/O module plug: Protection against faulty wiring	No protection, use cover.

Field device supply (I/O module TXM)	
AC 24 V output current (terminal V~ on the TXM module)	Max. 2 A, short-circuit proof (only if PXC7 is powered by AC voltage) If PXC7 is powered by DC voltage, the field device supply on terminal V~ of the TXM modules is also DC voltage.

Screw terminals, plug-in	
Cu-wire or Cu-strand with wire end sleeve	1 x 0.6 mm ø to 2.5 mm^2 (22 to 14 AWG) or 2 x 0.6 mm ø to 1.0 mm^2 (22 to 18 AWG)
Cu-strand without wire end sleeve	1 x 0.6 mm ø to 2.5 mm^2 (22 to 14 AWG) or 2 x 0.6 mm ø to 1.5 mm^2 (22 to 16 AWG)
Stripping length	6...7.5 mm (0.24...0.29 in)
Screwdriver	Slot screws, screwdriver size 1 with shaft ø = 3 mm
Max. tightening torque	0.6 Nm (0.44 lb ft)

Conformity

Ambient conditions and protection classification	
Classification as per EN 60730 Automatic action Control function Pollution degree Overvoltage category	 Type 1 Class A 2 I
Protection against electric shock	Protection class III
Protection degree of housing to EN 60529 Front parts in DIN cut-out Terminal part	 IP30 IP20
Climatic ambient conditions ● Storage / Transport (packaged for transport) as per IEC EN 60721-3-2 ● Operation as per IEC/EN 60721-3-3	 ● Class 1K22 / 2K12 Temperature -25...70 °C (-13...158 °F) Air humidity 5...95 % (non-condensing) ● Class 3K23 Operation in enclosed dry locations, having no temperature or humidity control Temperature -5...50 °C (23...122 °F) *(for details see chapter Mounting)* Air humidity 5...95 % (non-condensing)
Mechanical ambient conditions ● Transport per IEC/EN 60721-3-2 ● Operation as per IEC/EN 60721-3-3	 ● Class 2M4 ● Class 3M11

Standards, directives, and approvals	
Product standards	IEC/EN 60730-1
Product family standard	IEC/EN 63044-x
Electromagnetic compatibility (EMC)	For residential, commercial, and industrial environments
EU conformity (CE)	See CE declaration [1]
UK conformity (UKCA)	See UK declaration [1]
EAC conformity	Eurasian compliance
RCM conformity	See RCM declaration [1]
UL/cUL certification (US / Canada)	UL916, http://ul.com/database UL94, housing material meets classification V-0 [2]
CSA certification	C22.2, http://csagroup.org/services-industries/product-listing
FCC	CFR 47 Part 15C
BACnet	Profile: B-BC Revision: 1.20 Detailed information on BACnet certificates, BTL listings, and PICS can be found on the BACnet website (filtered for Siemens products)
AMEV profile (BACnet 2017 / BACtwin 2025)	AS-D (includes profiles AS-A, AS-B, and AS-C) [3]
KBOB profile (BACnet 2017)	AS-CH
Environmental compatibility [1]	The product environmental declaration [1] contains data on environmentally compatible product design and assessments (RoHS compliance, materials composition, packaging, environmental benefit, disposal).
OSHPD seismic certification	Product meets OSHPD Special Seismic Certification Preapproval (OSP-0217) under California Building Code 2022 (CBC 2022) [4]

[1] Documents can be downloaded at www.siemens.com/bt/download.
[2] Material level
[3] AS-C and AS-D pending
[4] When installed within the following Siemens enclosures: PXA-ENC18, PXA-ENC19, or PXA-ENC34.

European Union conformity

Contact for regulatory topics: (EU) Siemens AG, Berliner Ring 23, DE-76437 Rastatt

United Kingdom conformity assessed

Contact for regulatory topics: (GB) Siemens plc, Sir William Siemens House, Princess Road, Manchester, M20 2UR

FCC Statement

This equipment has been tested and found to comply with the limits for a Class B digital device, pursuant to part 15 of the FCC Rules. These limits are designed to provide reasonable protection against harmful interference in a residential installation. This equipment generates, uses and can radiate radio frequency energy and, if not installed and used in accordance with the instructions, may cause harmful interference to radio communications. However, there is no guarantee that interference will not occur in a particular installation. If this equipment does cause harmful interference to radio or television reception, which can be determined by turning the equipment off and on, the user is encouraged to try to correct the interference by one or more of the following measures:

- Reorient or relocate the receiving antenna.
- Increase the separation between the equipment and receiver.
- Connect the equipment into an outlet on a circuit different from that to which the receiver is connected.
- Consult the dealer or an experienced radio/TV technician for help.

This device complies with Part 15 of the FCC rules. Operation is subject to the following two conditions:

1. This device may not cause harmful interference, and
2. This device must accept any interference received, including interference that may cause undesired operation

FCC Caution: Changes or modifications not expressly approved by Siemens Switzerland Ltd. could void user authority to operate the equipment. United States representative https://new.siemens.com/us/en/products/buildingtechnologies/home.html

Industry Canada statement

This device complies with ISED’s license-exempt RSSs. Operation is subject to the following two conditions:

1. This device may not cause interference, and
2. This device must accept any interference received, including interference that may cause undesired operation.

Radiofrequency radiation exposure statement

This equipment complies with FCC and IC radiation exposure limits set forth for an uncontrolled environment. This equipment should be installed and operated with a minimum distance of 20 cm between the radiator and your body.

This transmitter must not be co-located or operated in conjunction with any other antenna or transmitter.

Housing

Color top / bottom	2003 Ti-Grey / 804 Black
Dimensions	per DIN 43880, see Dimensions
Weight without / with packaging	516 g / 581 g

Connection terminals

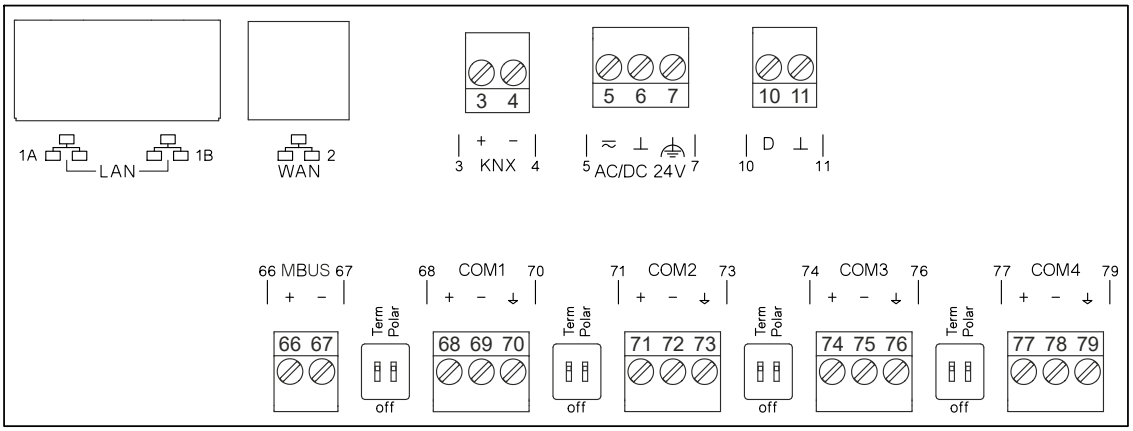

Terminal	Symbol	Description
1A, 1B		LAN: 2 x RJ45 interface for Ethernet with switch
2		WAN: 1 x RJ45 interface **Note**: WAN port does not support BACnet/SC connections
3, 4	KNX	KNX PL-Link
5, 6	≃ , ⊥	Operating voltage AC 24 V or DC 24 V
7	⏚	Functional ground (must be connected on the installation side with the building grounding system (PE)).
10, 11	D, ⊥	Digital input
Term	on, off	Switch for bus termination
Polar	on, off	Switch for polarization
66, 67	MBUS	M-bus interface
68, 69, 70	COM1	Interface EIA-485 (M-bus, Modbus RTU, BACnet MS/TP) Remark: Activation of COM1/2/3/4 depending on Type (S, M, L)
71, 72, 73	COM2	
74, 75, 79	COM3	
77, 78, 79	COM4	
Right side of device		Interface for connecting TXM I/O modules

Dimensions

All dimensions in mm and inches.

PXC7

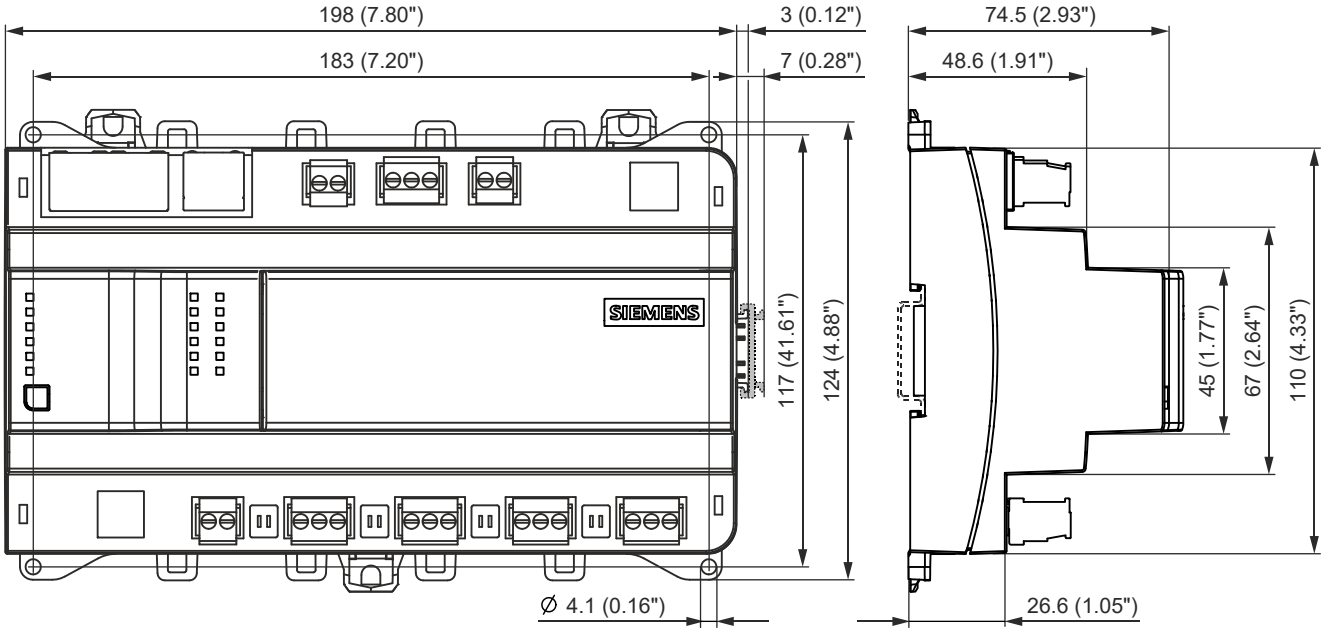

PXC7 with four TXM modules

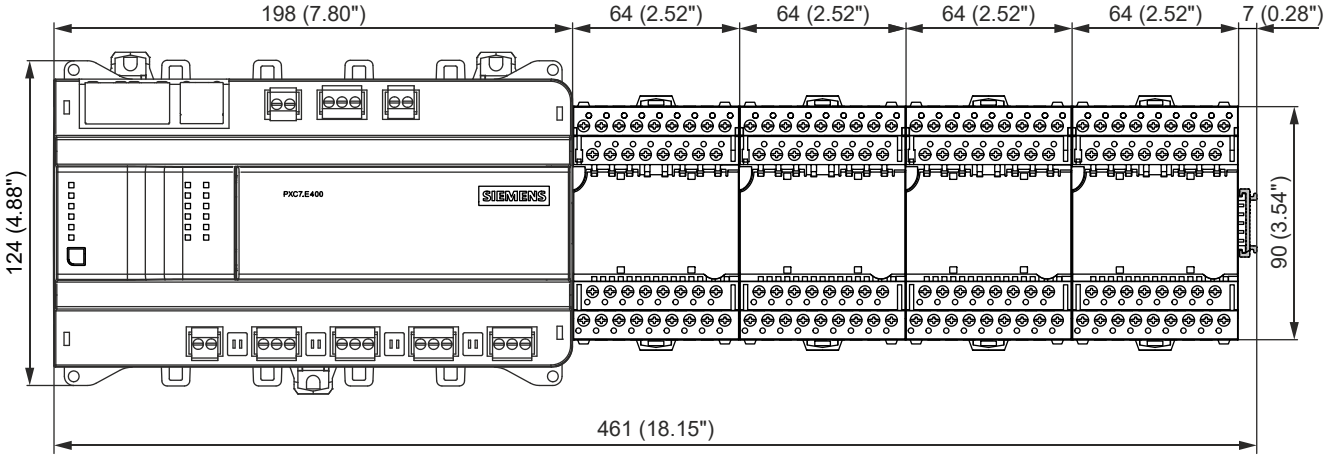

Issued by
Siemens Switzerland Ltd
Smart Infrastructure
Global Headquarters
Theilerstrasse 1a
CH-6300 Zug
+41 58 724 2424
www.siemens.com/buildingtechnologies

© Siemens 2022
Technical specifications and availability subject to change without notice.

Document ID A6V12505052_en--_j
Edition 2026-03-03