TRIO-PS-2G/1AC/24DC/10 - Power supply

2903149

https://www.phoenixcontact.com/ro/produse/2903149

Vă rugăm să țineți cont de faptul că datele afișate în acest document PDF au fost generate din catalogul nostru online. Datele complete sunt disponibile în documentația pentru utilizator. În cazul descărcărilor, se aplică Termenii și condițiile generale de utilizare ale companiei noastre.

Primary-switched TRIO POWER power supply with push-in connection for DIN rail mounting, input: single phase, output: 24 V DC/10 A

Descriere produs

TRIO POWER power supplies with standard functionality
The TRIO POWER power supply range with push-in connection has been perfected for use in machine building. All functions and the space-saving design of the single and three-phase modules are optimally tailored to the stringent requirements. Under challenging ambient conditions, the power supply units, which feature an extremely robust electrical and mechanical design, ensure the reliable supply of all loads.

Avantajele dumneavoastră

- Save time and costs, thanks to the Push-in connection and narrow design
- Increase system availability, thanks to dynamic boost with 150 % of the nominal current for 5 seconds
- Maximum flexibility due to the wide temperature range from -25°C to +70°C and device startup at -40°C
- Rugged design

Date comerciale

Număr articol	2903149
Unitate de ambalare	1 Bucată
Cantitate minimă pentru comandă	1 Bucată
Cod produs	CMPO13
GTIN	4046356960854
Greutate pe bucată (inclusiv ambalajul)	1.105 g
Greutate pe bucată (fără ambalaj)	919 g
Cod tarifar vamal	85044095
Țara de origine	CN

Date tehnice

Input data

AC operation

Network type	Star network
Nominal input voltage range	100 V AC ... 240 V AC
Input voltage range	100 V AC ... 240 V AC -15 % ... +10 %
Switch-on voltage	> 75 V AC
Shut-down voltage	< 70 V AC
Electric strength, max.	300 V AC 15 s
Typical national grid voltage	120 V AC
	230 V AC
Voltage type of supply voltage	AC
Inrush current	≤ 25 A (typical)
Inrush current integral (I^2t)	< 0.5 A^2s
Inrush current limitation	typ. 25 A (after 1 ms)
AC frequency range	50 Hz ... 60 Hz ±10 %
Mains buffering time	typ. 15 ms (120 V AC)
	typ. 20 ms (230 V AC)
Current consumption	3.1 A (100 V AC)
	2.4 A (120 V AC)
	1.3 A (230 V AC)
	1.4 A (240 V AC)
Nominal power consumption	285 VA
Protective circuit	Transient surge protection; Varistor
Power factor (cos phi)	0.93
Typical response time	< 1 s
Input fuse	6.3 A (internal (device protection))
Recommended breaker for input protection	6 A ... 16 A (Characteristics B, C, D, K)
Discharge current to PE	< 3.5 mA
POWER factor	> 0.9 (120 V AC)
	> 0.9 (230 V AC)

DC operation

Nominal input voltage range	110 V DC ... 250 V DC
Input voltage range	110 V DC ... 250 V DC -10 % ... +10 %
Switch-on voltage	≥ 95 V DC
Shut-down voltage	< 70 V DC
Voltage type of supply voltage	DC
Mains buffering time	> 15 ms (230 V AC)
Current consumption	2.5 A (110 V DC)
	1.1 A (250 V DC)

Output data

Efficiency	> 91 % (for 230 V AC and nominal values)
Output characteristic	U/I with dynamic load reserve
Nominal output voltage	24 V DC ±1 %
Setting range of the output voltage (U_{Set})	24 V DC ... 28 V DC (constant capacity)
Nominal output current (I_N)	10 A
Dynamic Boost ($I_{Dyn.Boost}$)	15 A (5 s)
Derating	> 60 °C ... 70 °C (2.5 %/K)
Feedback voltage resistance	≤ 35 V DC
Protection against overvoltage at the output (OVP)	≤ 30 V DC
Control deviation	< 1 % (change in load, static 10 % ... 90 %)
	< 3 % (Dynamic load change 10 % ... 90 %, 10 Hz)
	< 0.1 % (change in input voltage ±10 %)
Residual ripple	< 10 mV_{PP} (with nominal values)
Short-circuit-proof	yes
No-load proof	yes
Output power	240 W
	360 W (5 s)
Maximum no-load power dissipation	< 5.1 W (230 V)
Power loss nominal load max.	< 25 W
Rise time	≤ 12 ms (U_{OUT} (10 % ... 90 %))
Connection in parallel	yes, for redundancy and increased capacity
Connection in series	yes

Signal: DC OK

Maximum switching voltage	30 V AC/DC
Continuous load current	100 mA

Connection data

Input

Connection method	Push-in connection
Conductor cross-section, rigid min.	0.2 mm²
Conductor cross-section, rigid max.	4 mm²
Conductor cross-section flexible min.	0.2 mm²
Conductor cross-section flexible max.	2.5 mm²
Conductor cross-section AWG min.	24
Conductor cross-section AWG max.	12
Stripping length	10 mm

Output

Connection method	Push-in connection
Conductor cross-section, rigid min.	0.2 mm²
Conductor cross-section, rigid max.	4 mm²
Conductor cross-section flexible min.	0.2 mm²

Conductor cross-section flexible max.	2.5 mm²
Conductor cross-section AWG min.	24
Conductor cross-section AWG max.	12
Stripping length	8 mm

Signal

Connection method	Push-in connection
Conductor cross-section, rigid min.	0.2 mm²
Conductor cross-section, rigid max.	1.5 mm²
Conductor cross-section flexible min.	0.2 mm²
Conductor cross-section flexible max.	1.5 mm²
Conductor cross-section AWG min.	24
Conductor cross-section AWG max.	16
Stripping length	8 mm

Signaling

Types of signaling	LED
	Floating signal contact

Signal output: LED status indicator

Signalization designation	DC OK
Status display	LED
Color	green
DC OK	U_{OUT} > 0.9 x U_N
13/14	U_{OUT} > 0.9 x U_N

Electrical properties

Number of phases	1
Insulation voltage input/output	3 kV AC (type test)
	1.5 kV AC (routine test)

Product properties

Product family	TRIO POWER
MTBF (IEC 61709, SN 29500)	> 1800000 h (25 °C)
	> 1000000 h (40 °C)
	> 480000 h (60 °C)

Insulation characteristics

Protection class	I (in closed control cabinet)
Degree of pollution	2

Dimensions

Width	42 mm
Height	130 mm
Depth	160 mm

Installation dimensions

Installation distance right/left	0 mm / 0 mm
Installation distance top/bottom	50 mm / 50 mm

Mounting

Mounting type	DIN rail mounting
Assembly note	alignable: horizontally 0 mm (≤ 40 °C) 10 mm (≤ 70 °C), vertically 50 mm
Mounting position	horizontal DIN rail NS 35, EN 60715
With protective coating	no

Material specifications

Flammability rating according to UL 94 (housing / terminal blocks)	V0
Housing material	Metal
Type of housing	Aluminum (AlMg3)
Hood version	Polycarbonate

Environmental and real-life conditions

Ambient conditions

Degree of protection	IP20
Ambient temperature (operation)	-25 °C ... 70 °C (> 60 °C Derating: 2,5 %/K)
Ambient temperature (storage/transport)	-40 °C ... 85 °C
Ambient temperature (start-up type tested)	-40 °C
Maximum altitude	≤ 5000 m (> 2000 m, Derating: 10 %/1000 m)
Climatic class	3K3 (in acc. with EN 60721)
Max. permissible relative humidity (operation)	≤ 95 % (at 25 °C, non-condensing)
Shock	18 ms, 30g, in each space direction (according to IEC 60068-2-27)
Vibration (operation)	< 15 Hz, amplitude ±2.5 mm (according to IEC 60068-2-6)
	15 Hz ... 150 Hz, 4g, 90 min.
	DNV GL CG-0339 / Class B 2 Hz - 100 Hz resonance search, 90 min. in resonance, 2 Hz - 25 Hz, ±1.6 mm amplitude, 25 Hz - 100 Hz, 4g acceleration

Standards and regulations

Rail applications	EN 50121-4
Standard – Limitation of mains harmonic currents	EN 61000-3-2
Standard - Electrical safety	IEC 62368-1 (SELV)
Standard – Safety extra-low voltage	IEC 62368-1 (SELV) und EN 60204-1 (PELV)
Standard - Safe isolation	DIN VDE 0100-410
Standard - Safety of transformers	EN 61558-2-16 (air clearances and creepage distances only)

Fire protection in rail vehicles

Standard designation	Fire protection in rail vehicles

Standards/specifications	EN 45545-2 (HL3)

Approvals

UL approvals	UL Listed UL 508
	UL/C-UL Recognized UL 60950-1
	UL ANSI/ISA-12.12.01 Class I, Division 2, Groups A, B, C, D (Hazardous Location)

Conformity/Approvals

SIL in accordance with IEC 61508	0

EMC data

Electromagnetic compatibility	Conformance with EMC Directive 2014/30/EU
Low Voltage Directive	Conformance with Low Voltage Directive 2014/35/EC
EMC requirements for noise emission	EN 61000-6-3
	EN 61000-6-4
EMC requirements for noise immunity	EN 61000-6-1
	EN 61000-6-2

Noise emission

Standards/regulations	EN 55011 (EN 55022)

Electrostatic discharge

Standards/regulations	EN 61000-4-2

Electrostatic discharge

Contact discharge	6 kV (Test Level 4)
Discharge in air	8 kV (Test Level 4)
Comments	Criterion A

Electromagnetic HF field

Standards/regulations	EN 61000-4-3

Electromagnetic HF field

Frequency range	80 MHz ... 1 GHz
Test field strength	10 V/m (Test Level 3)
Frequency range	1 GHz ... 2 GHz
Test field strength	10 V/m (Test Level 3)
Frequency range	2 GHz ... 3 GHz
Test field strength	10 V/m (Test Level 3)
Comments	Criterion A

Fast transients (burst)

Standards/regulations	EN 61000-4-4

Fast transients (burst)

Input	4 kV (Test Level 4 - asymmetrical)
Output	2 kV (Test Level 3 - asymmetrical)

Signal	1 kV (Test Level 2 - asymmetrical)
Comments	Criterion A

Surge voltage load (surge)

Standards/regulations	EN 61000-4-5

Surge voltage load (surge)

Input	3 kV (Test Level 3 - symmetrical)
	6 kV (Test Level 4 - asymmetrical)
Output	1 kV (Test Level 2 - symmetrical)
	2 kV (Test Level 1 - asymmetrical)
Signal	1 kV (Test Level 2 - asymmetrical)
Comments	Criterion B

Conducted interference

Standards/regulations	EN 61000-4-6

Conducted interference

Input/Output	asymmetrical
Frequency range	0.15 MHz ... 80 MHz
Comments	Criterion A
Voltage	10 V (Test Level 3)

Emitted interference

Standards/regulations	EN 61000-6-3
Radio interference voltage in acc. with EN 55011	EN 55011 (EN 55022) Class B, area of application: Industry and residential
Emitted radio interference in acc. with EN 55011	EN 55011 (EN 55022) Class B, area of application: Industry and residential

Criteria

Criterion A	Normal operating behavior within the specified limits.
Criterion B	Temporary impairment to operational behavior that is corrected by the device itself.

Desene

Block diagram

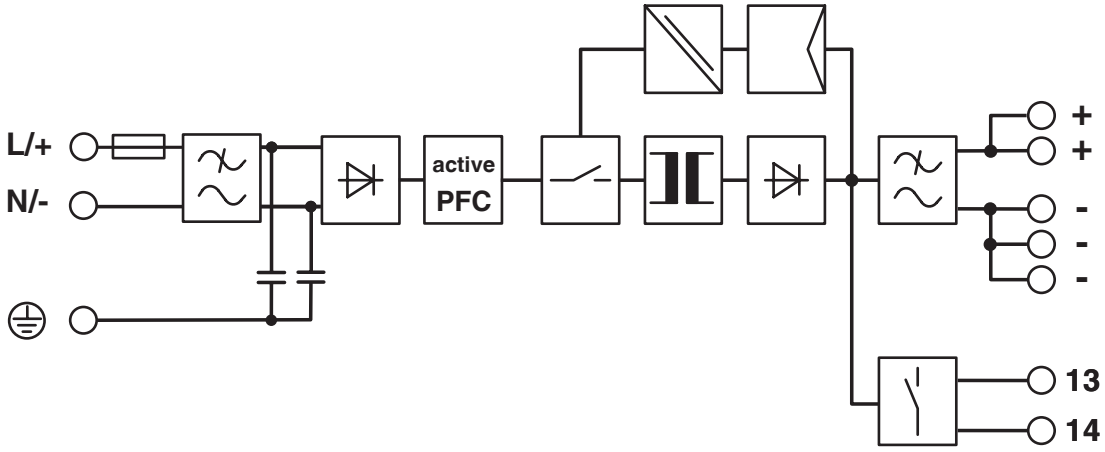

Aprobări

To download certificates, visit the product detail page: https://www.phoenixcontact.com/ro/produse/2903149

cUL Recognized
ID de înregistrare: E211944

UL Recognized
ID de înregistrare: E211944

IECEE CB Scheme
ID de înregistrare: DK-45300-A1-UL

EAC
ID de înregistrare: RU S-DE.BL08.W.00764

UL Listed
ID de înregistrare: FILE E 123528

cUL Listed
ID de înregistrare: FILE E 123528

EAC
ID de înregistrare: RU S-DE.BL08.W.00764

DNV
ID de înregistrare: TAA00000BM

IECEE CB Scheme
ID de înregistrare: DE/PTZ/0036/A1

BIS Licence Document
ID de înregistrare: R-41214701

cUL Listed
ID de înregistrare: E199827

UL Listed
ID de înregistrare: FILE E 199827

Clasificări

ECLASS

ECLASS-13.0	27040701
ECLASS-15.0	27040701

ETIM

ETIM 10.0	EC002540

UNSPSC

UNSPSC 21.0	39121000

Environmental product compliance

EU RoHS

Îndeplinește cerințele conform directivei RoHS	Da
reglementări excepționale, dacă sunt cunoscute	7(a), 7(c)-I

China RoHS

Environment friendly use period (EFUP)	EFUP-25
	Un tabel de declarații China RoHS legat de articol poate fi găsit în zona de descărcare a articolului respectiv la „Declarația producătorului”. Nu se emite și nu este necesar niciun tabel de declarații China RoHS pentru toate articolele EFUP-E.

EU REACH SVHC

Trimitere la substanța candidată REACH (nr. CAS)	Diboron trioxide(nr. CAS: 1303-86-2)
	Lead monoxide (lead oxide)(nr. CAS: 1317-36-8)
	Lead(nr. CAS: 7439-92-1)
	6,6'-di-tert-butyl-2,2'-methylenedi-p-cresol(nr. CAS: 119-47-1)
SCIP	e8c5c279-78d1-4e29-9eba-0c4adf04f6c5

EF3.1 Schimbările climatice

CO2e kg	12,57 kg CO2e

Phoenix Contact 2026 © - Toate drepturile rezervate
https://www.phoenixcontact.com

PHOENIX CONTACT România
Splaiul Unirii 165 Timpuri Noi Square TNO1, Etaj 1
Bucuresti 030133
+40 21 350 88 12 - 3
sales.ro@phoenixcontact.com