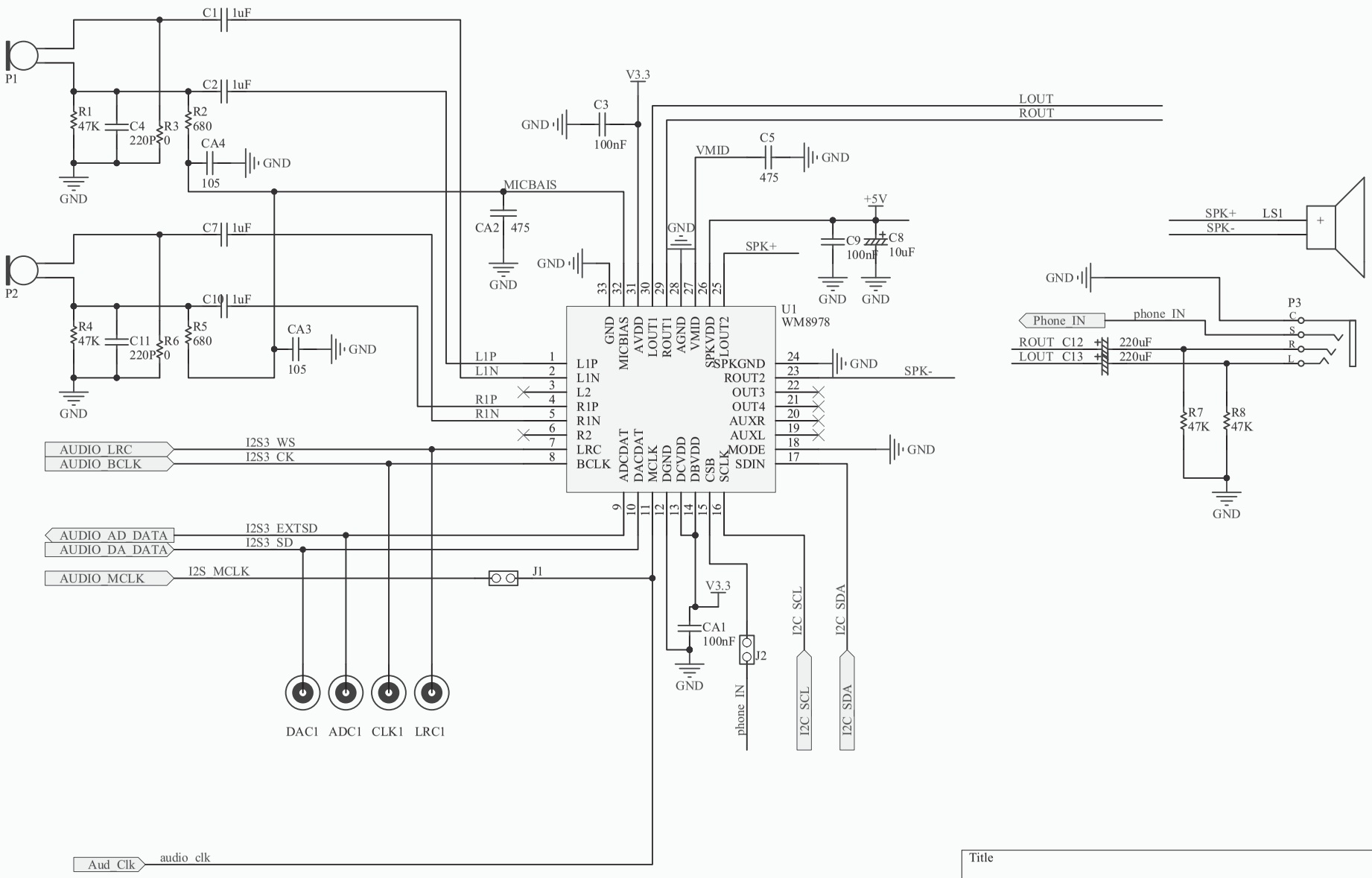

Title		
Size A4	Number	Revision
Date: 2012/7/25		Sheet of
File: E:\soft\..\audio.SchDoc		Drawn By: