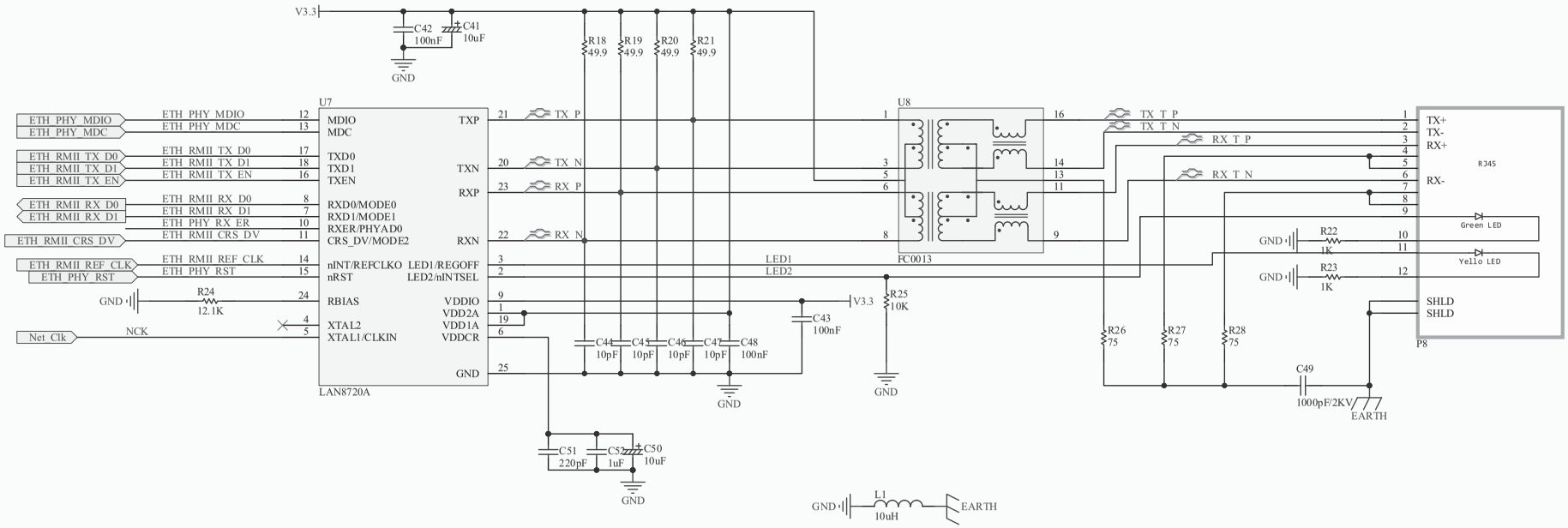

Title		
Size A3	Number	Revision
Date: 2012/7/25		Sheet of
File: E:\soft\..\ethernet.SchDoc		Drawn By: