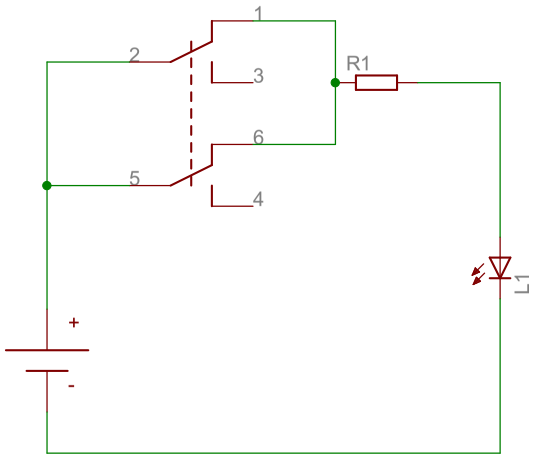

Released under the Creative Commons Attribution Share-Alike License
http://creativecommons.org/licenses/by-sa/4.0/

Designed by Stephan Watterott (Watterott electronic)

Logo

OSHW-RGB-Badge_v11

30.07.2014 12:03:35

Sheet: 1/1

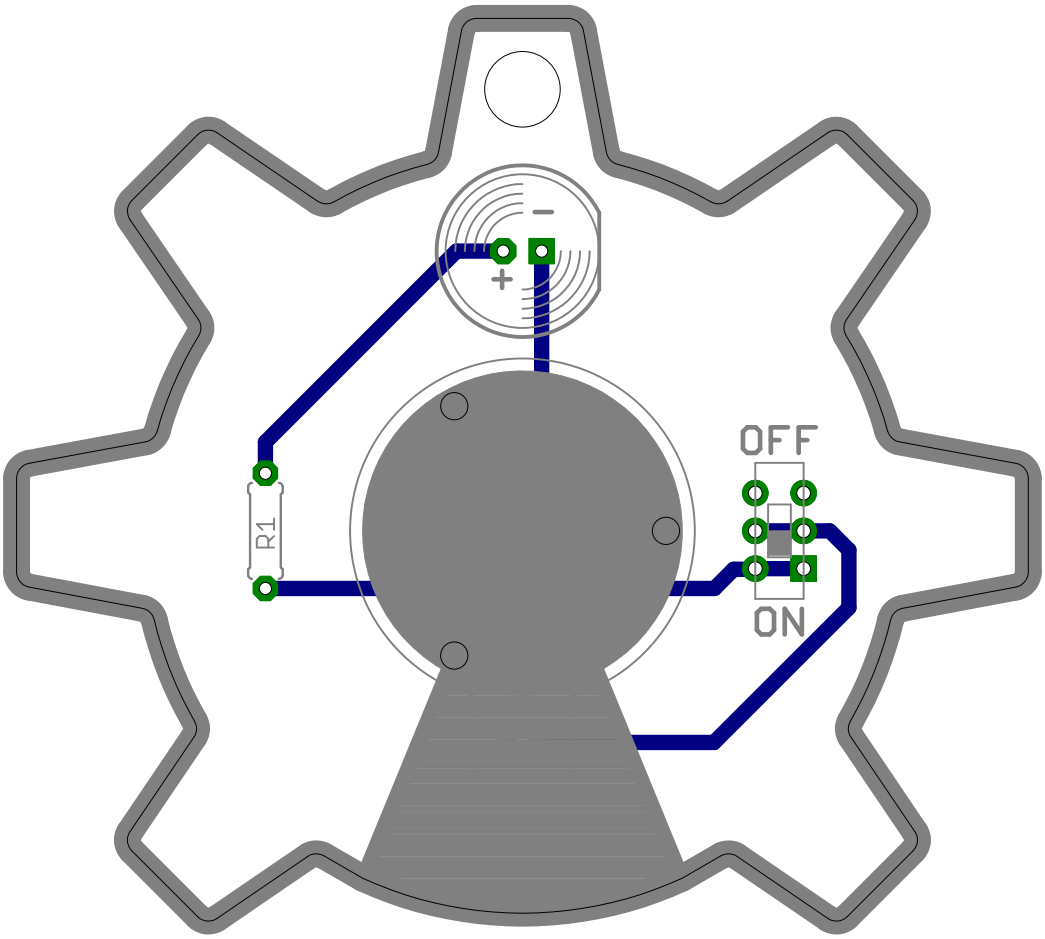
−
+
R1
OFF
ON