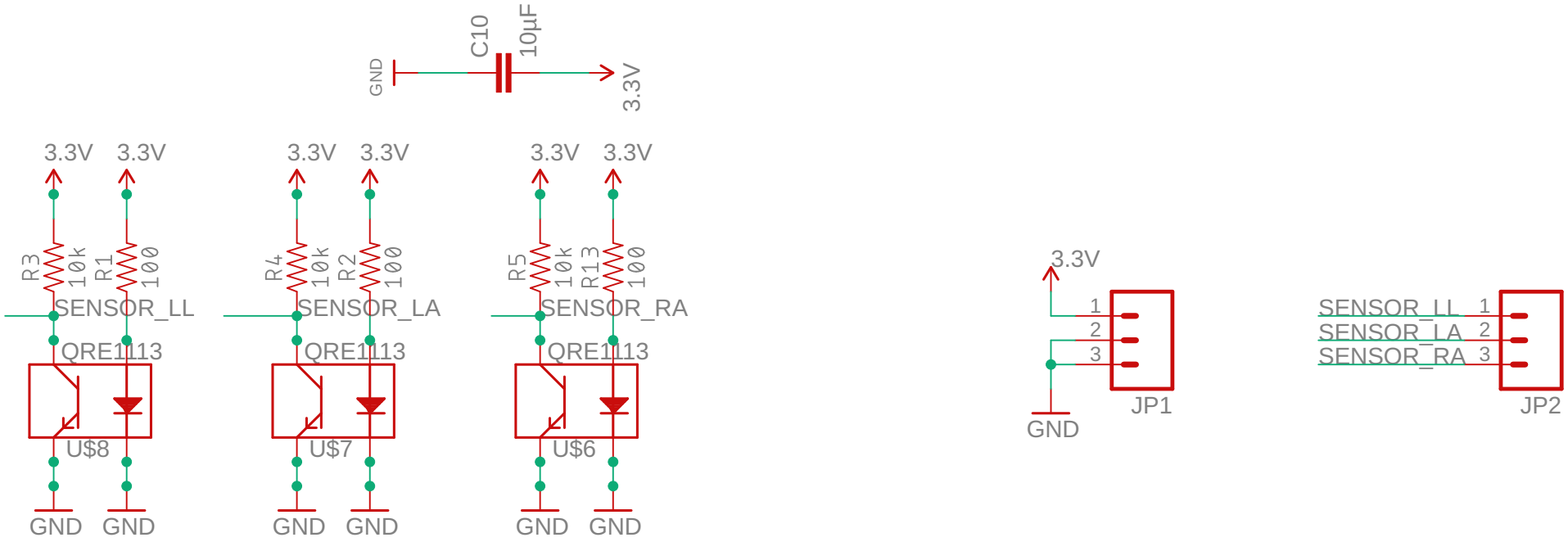

Zie o.a.: https://dspace.cvut.cz/bitstream/handle/10467/74696/FBMI-BP-2017-Sagynbay-Rustam-prace.pdf?sequence=-1&isAllowed=y
https://www.nxp.com/docs/en/application-note/AN4327.pdf