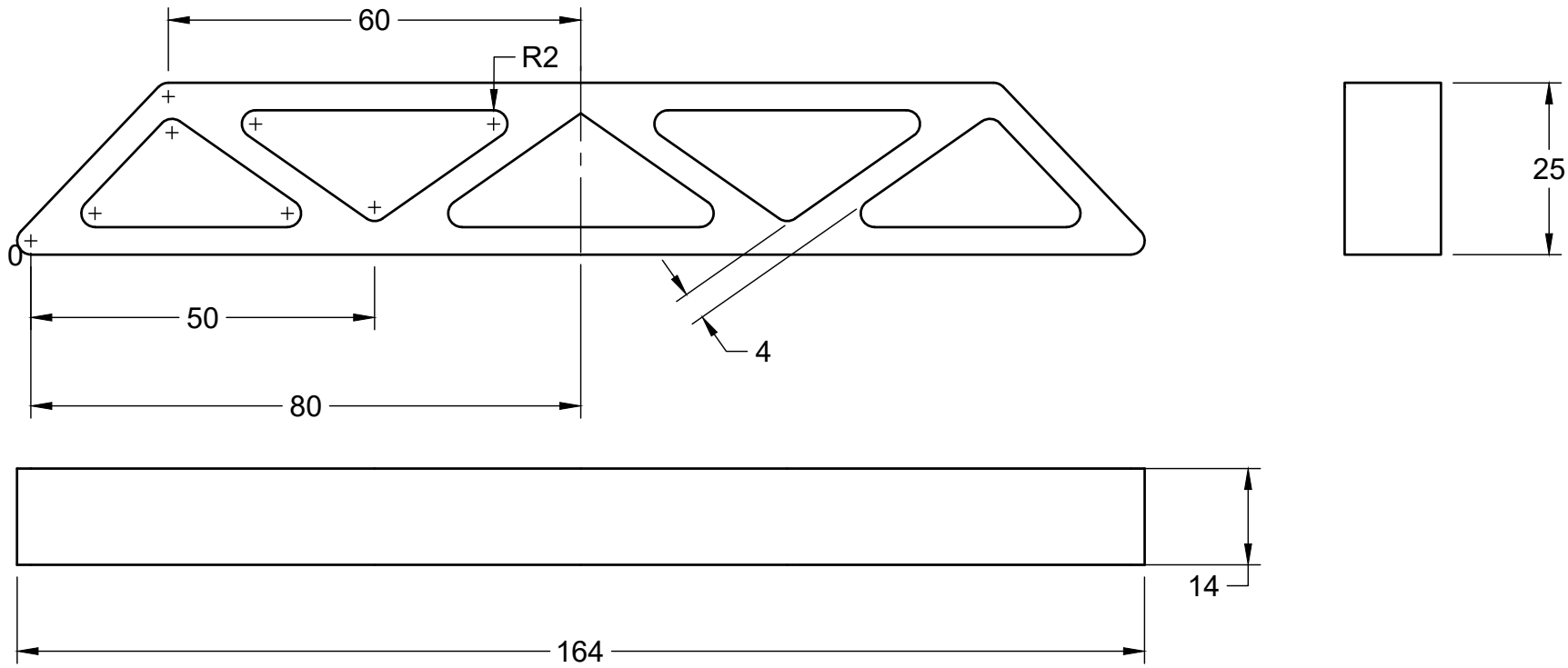

ALL DIMENSIONS IN MM	PROJECT AER304 Beam				
	TITLE The Elementary Truss				
APPROVED	SIZE	CODE	DWG NO		REV
CHECKED	A		1		1
DRAWN Group 1 2022-03-19	SCALE 1:1	WEIGHT 29.1 g		SHEET 1/1	