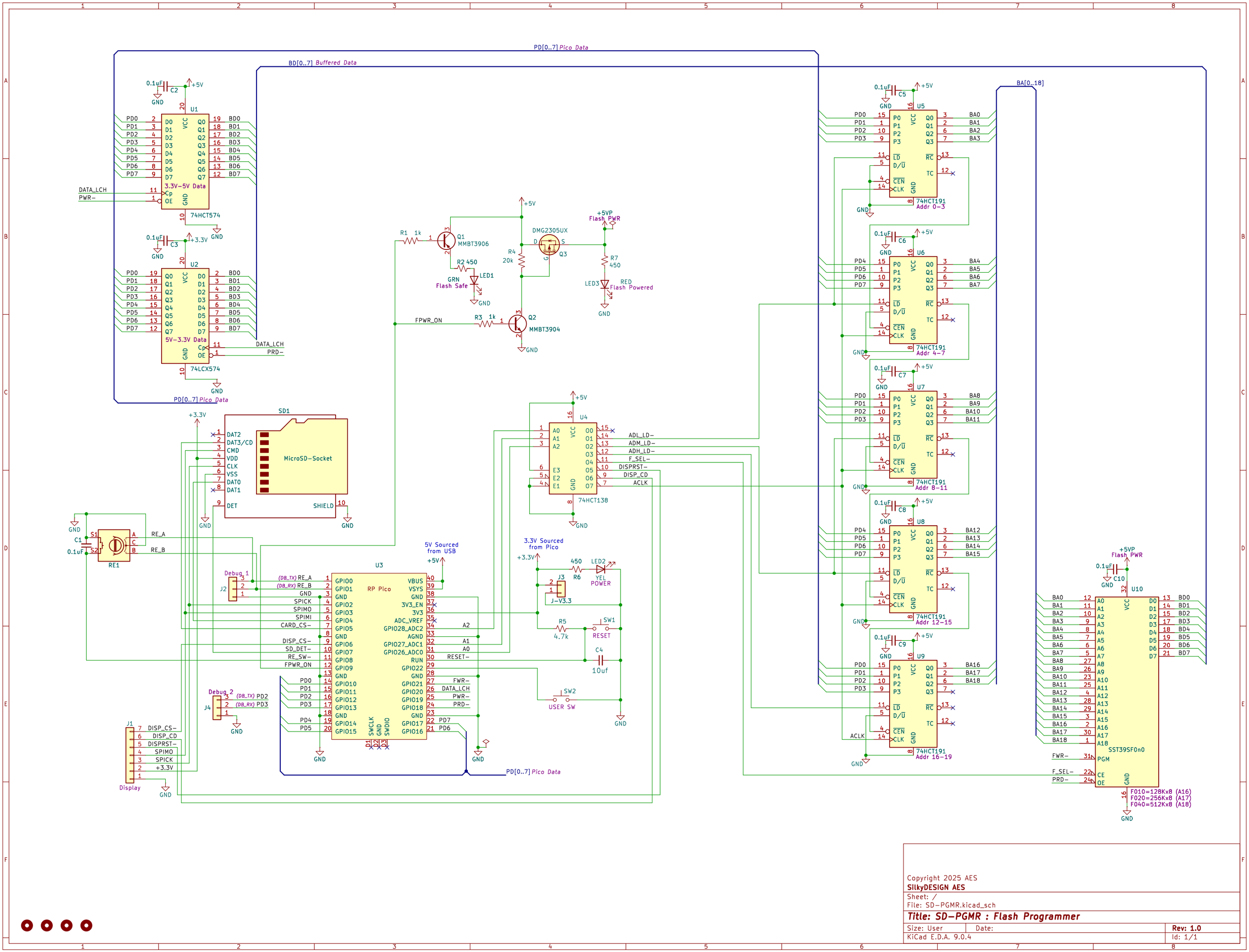

Copyright 2025 AES

SilkyDESIGN AES

Sheet: /

File: SD–PGMR.kicad_sch

Title: SD–PGMR : Flash Programmer

Size: User	Date:	Rev: 1.0
KiCad E.D.A. 9.0.4		Id: 1/1