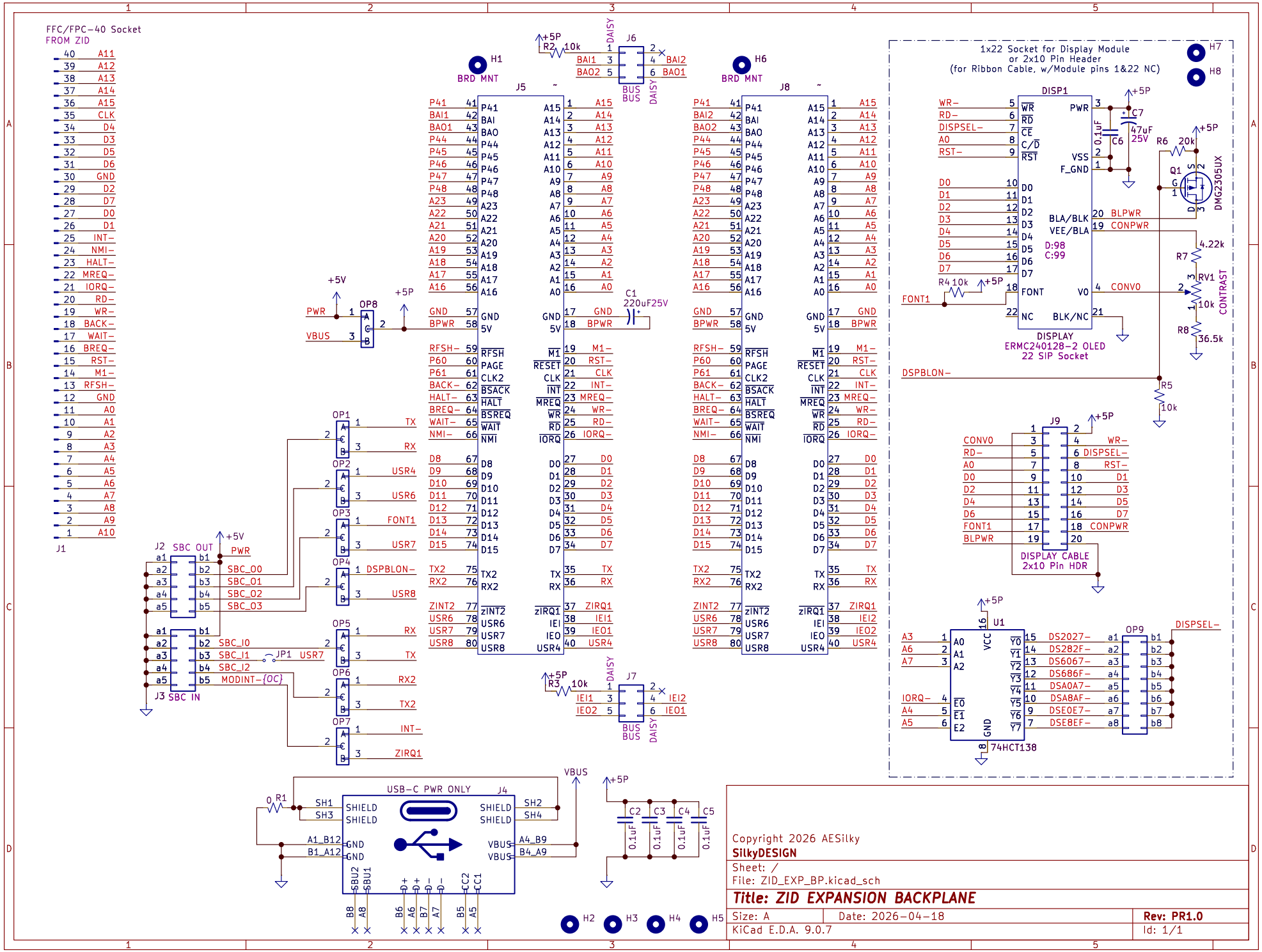

Copyright 2026 AESilky

SilkyDESIGN

Sheet: /

File: ZID_EXP_BP.kicad_sch

Title: ZID EXPANSION BACKPLANE

Size: A	Date: 2026-04-18	Rev: PR1.0
KiCad E.D.A. 9.0.7		Id: 1/1