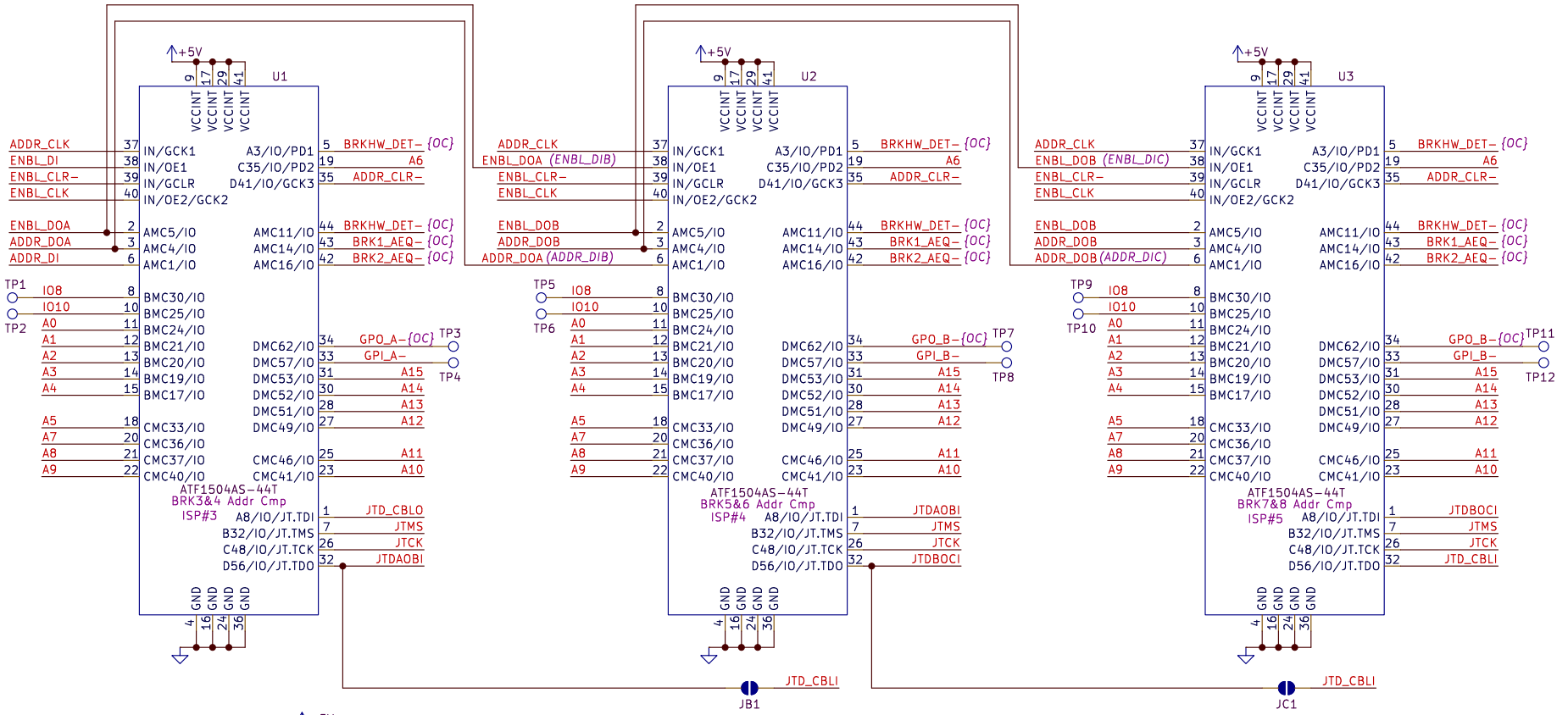

Solder jumper JB1 is used when Unit−B is not loaded, solder jumper JC1 is used when Unit−C is not loaded.
Unit−A is always loaded, then Unit−B, and then Unit−C.

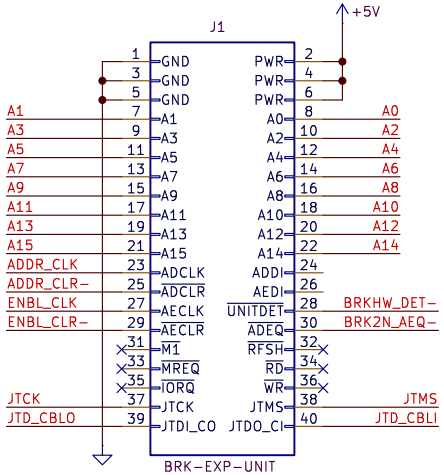

Note: The M1−,MREQ−,IORQ−,RD−,WR−, RFSH− signals are not used for break address detection. They are on the connector to aid board debugging.

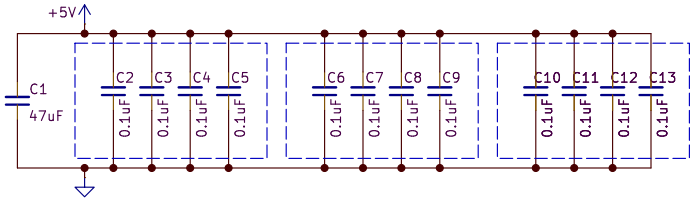

Adds 2 or 4 Address Compare Units

Copyright 2026, AESilky

SilkyDESIGN

Sheet: /
File: ZID_BRK_EXP.kicad_sch

Title: ZID Breakpoint Expansion

Size: A	Date: 2026−04−17	Rev: PR1.0
KiCad E.D.A. 9.0.7		Id: 1/1