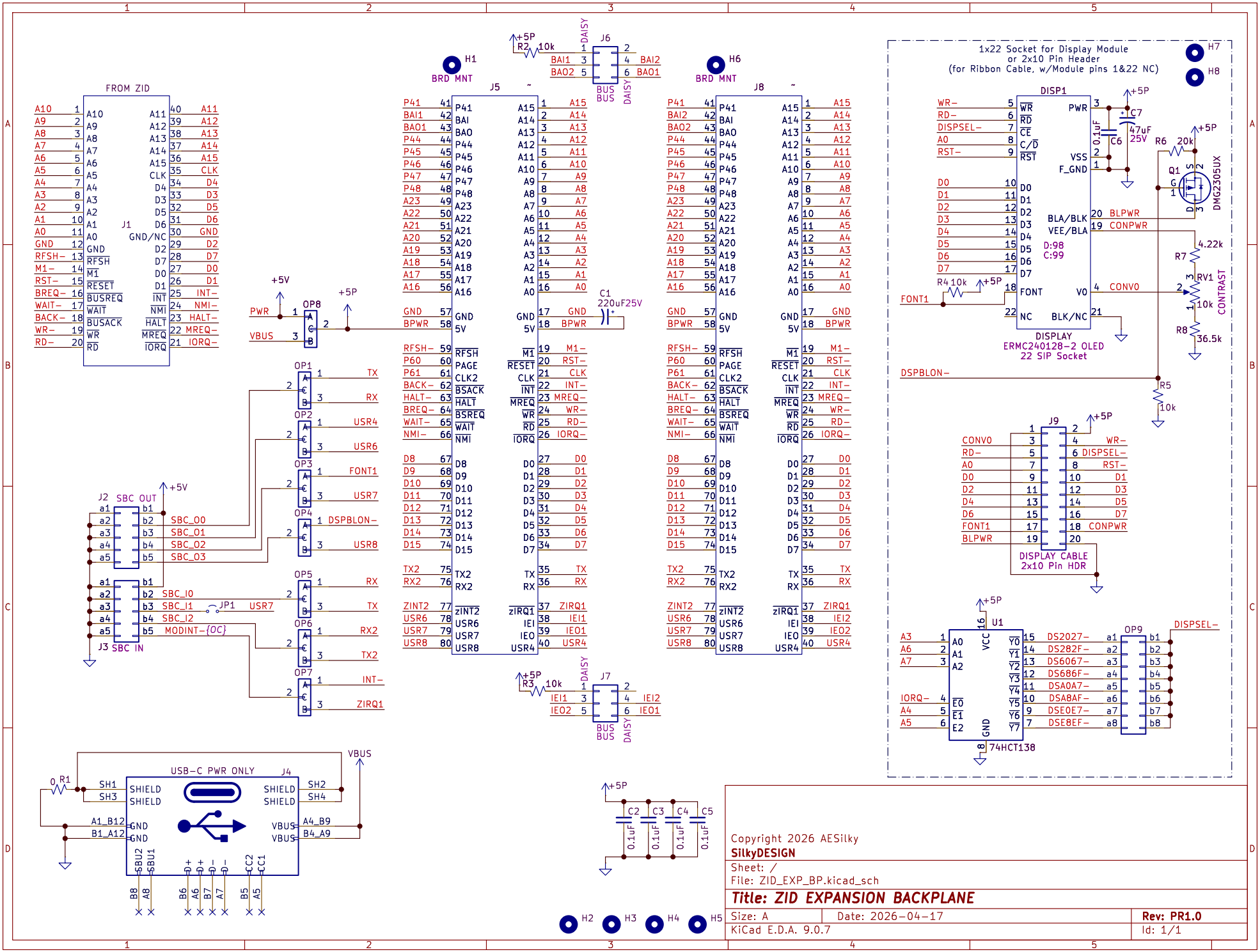
FROM ZID
J1
J2 SBC OUT
J3 SBC IN
J4
USB-C PWR ONLY
J5
J6
J7
J8
J9
OP1
OP2
OP3
OP4
OP5
OP6
OP7
OP8
OP9
DISP1
DISPLAY
ERMC240128-2 OLED
22 SIP Socket
1x22 Socket for Display Module
or 2x10 Pin Header
(for Ribbon Cable, w/Module pins 1&22 NC)
DISPLAY CABLE
2x10 Pin HDR
U1
74HCT138
DMG2305UX
CONTRAST
BRD MNT
H1
H2
H3
H4
H5
H6
H7
H8
C1
220uF25V
R1
0
R2
10k
R3
10k
R4 10k
R5
10k
R6
20k
R7
4.22k
R8
36.5k
RV1
10k
C2
C3
C4
C5
C6
C7
47uF
25V
0.1uF
JP1
+5V
+5P
VBUS
Copyright 2026 AESilky
SilkyDESIGN
Sheet: /
File: ZID_EXP_BP.kicad_sch
Title: ZID EXPANSION BACKPLANE
Size: A
Date: 2026-04-17
Rev: PR1.0
KiCad E.D.A. 9.0.7
Id: 1/1