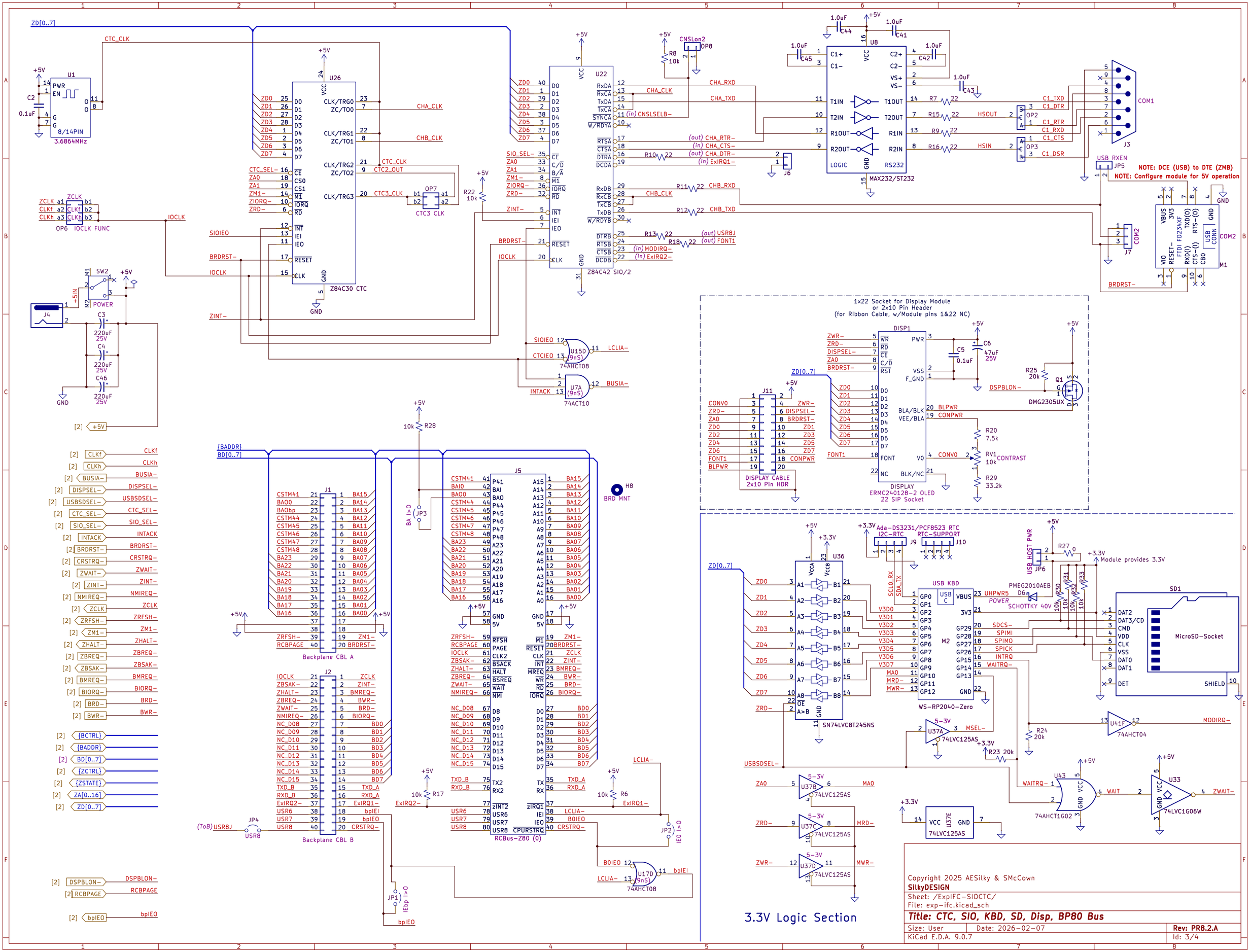

NOTE: DCE (USB) to DTE (ZMB)

NOTE: Configure module for 5V operation

Copyright 2025 AESilky & SMcCown

SilkyDESIGN

Sheet: /ExpIFC-SIOCTC/

File: exp-ifc.kicad_sch

Title: CTC, SIO, KBD, SD, Disp, BP80 Bus

Size: User	Date: 2026-02-07	Rev: PR8.2.A
KiCad E.D.A. 9.0.7		Id: 3/4