Sheetname: MainBoard-CPU_Decode

File: mainboard.kicad_sch

ExpIFC-SIOCTC

File: exp-ifc.kicad_sch

LOGIC_PWR_SPARES

File: logic_pwr_spr.kicad_sch

Copyright 2025 AESilky & SMcCown

SilkyDESIGN

Sheet: /

File: SD-ZMB.kicad_sch

Title: Retro Z80 Motherboard w/Paripherals & RC2014 Bus

Size: User	Date: 2026-02-07	**Rev: PR8.2.A**
KiCad E.D.A. 9.0.7		Id: 1/4

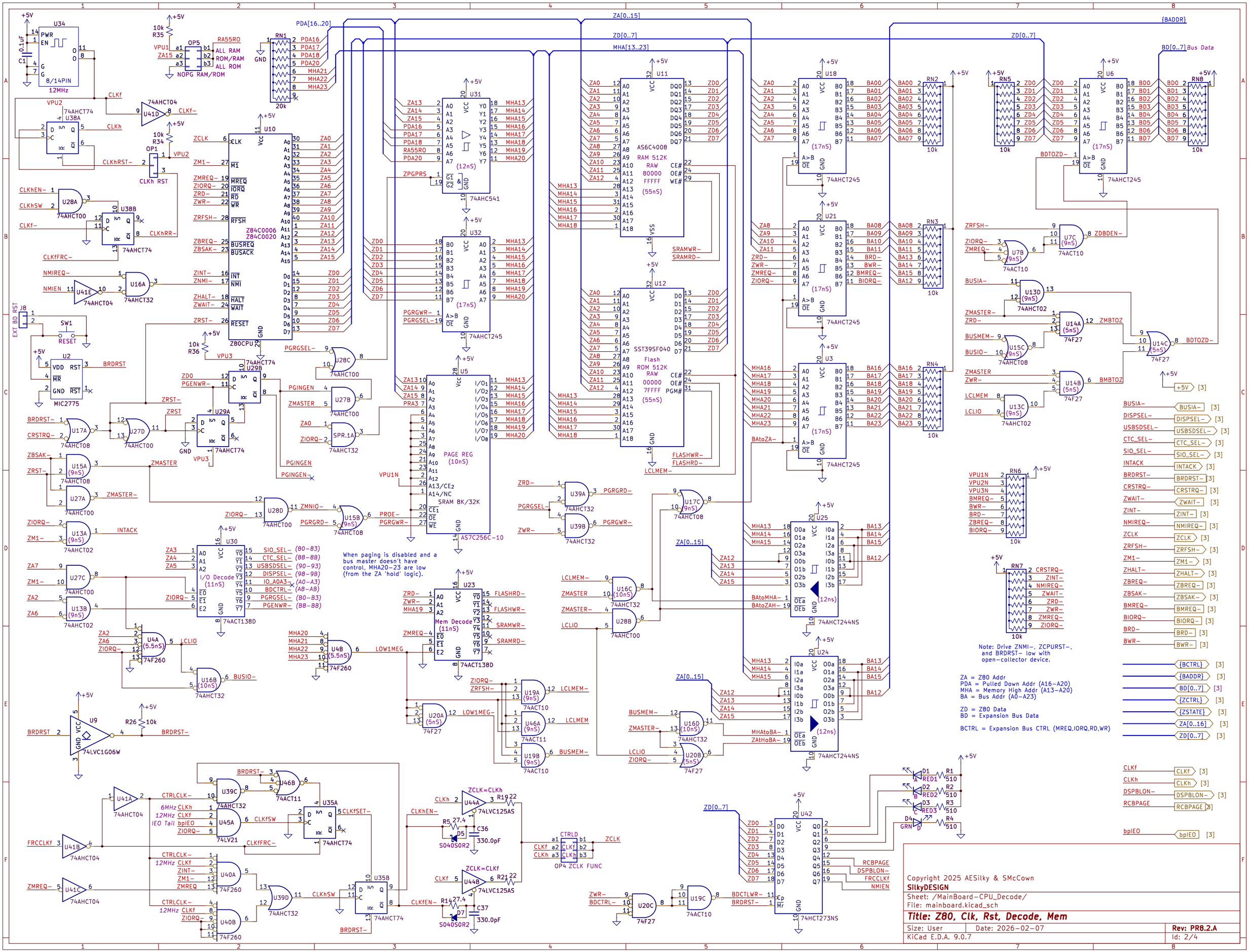
U34
8/14PIN
12MHz
U10
Z80CPU
Z84C0006
Z84C0020
U11
AS6C4008
RAM 512K
RAW
80000
FFFFF
(55nS)
U12
SST39SF040
Flash
ROM 512K
RAW
00000
7FFFF
(55nS)
U31
74AHC541
U32
74AHCT245
U5
PAGE REG
(10nS)
SRAM 8K/32K
AS7C256C-10
U30
I/O Decode
(11nS)
74ACT138D
U23
Mem Decode
(11nS)
74ACT138D
U18
U21
U3
U6
U25
U24
74AHCT244NS
U42
74HCT273NS
ZA[0..15]
ZD[0..7]
MHA[13..23]
{BADDR}
BD[0..7] Bus Data
PDA[16..20]
When paging is disabled and a bus master doesn't have control, MHA20–23 are low (from the ZA 'hold' logic).
Note: Drive ZNMI–, ZCPURST–, and BRDRST– low with open-collector device.
ZA = Z80 Addr
PDA = Pulled Down Addr (A16–A20)
MHA = Memory High Addr (A13–A20)
BA = Bus Addr (A0–A23)
ZD = Z80 Data
BD = Expansion Bus Data
BCTRL = Expansion Bus CTRL (MREQ,IORQ,RD,WR)
Copyright 2025 AESilky & SMcCown
SilkyDESIGN
Sheet: /MainBoard–CPU_Decode/
File: mainboard.kicad_sch
Title: Z80, Clk, Rst, Decode, Mem
Size: User
Date: 2026–02–07
KiCad E.D.A. 9.0.7
Rev: PR8.2.A
Id: 2/4

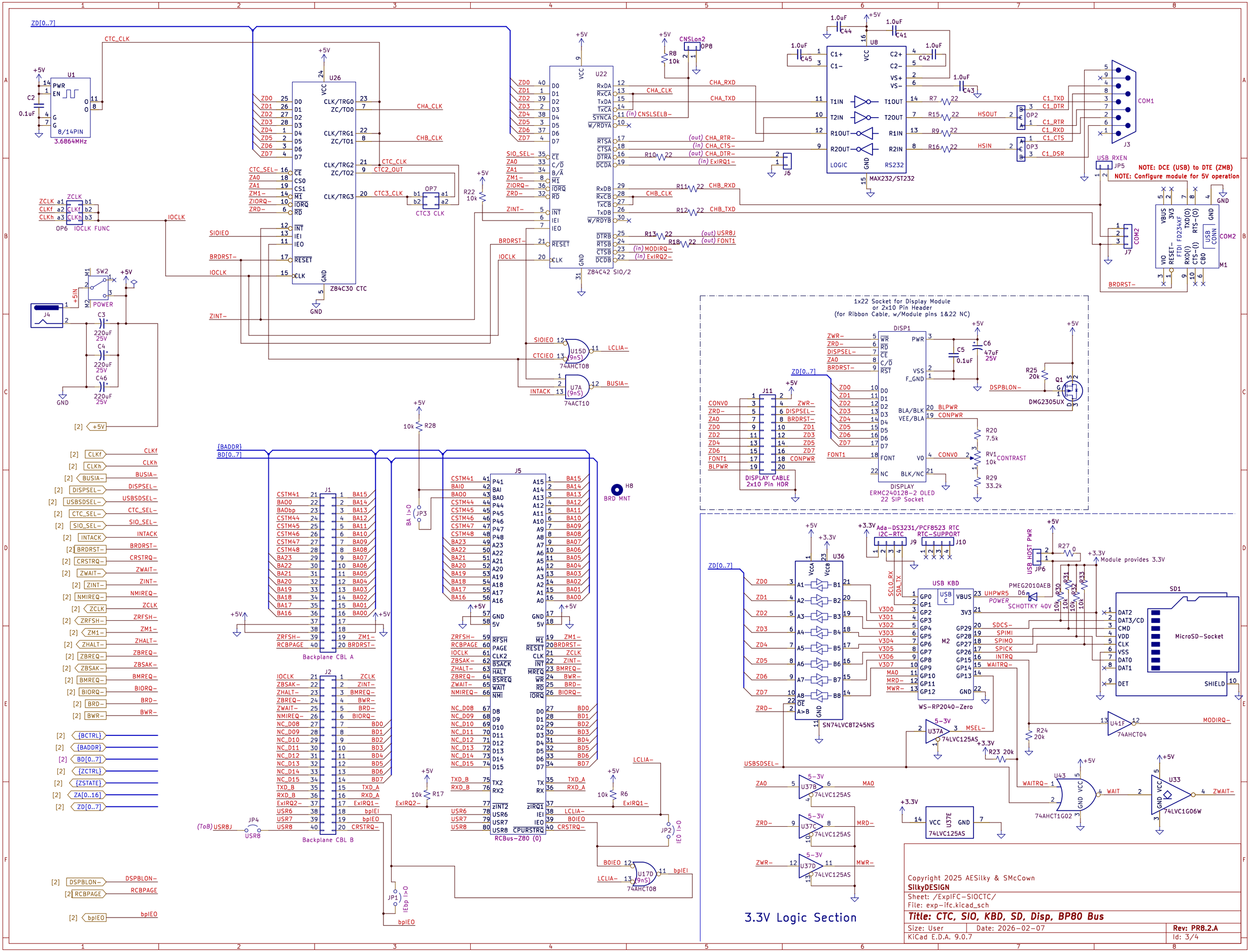
U1
PWR
EN
8/14PIN
3.6864MHz
U26
CLK/TRG0
ZC/TO0
CLK/TRG1
ZC/TO1
CLK/TRG2
ZC/TO2
CLK/TRG3
Z84C30 CTC
U22
Z84C42 SIO/2
U8
MAX232/ST232
LOGIC
RS232
COM1
J3
COM2
J7
M1
USB CONN
FTDI FD234XF
OP6 IOCLK FUNC
SW2
POWER
J4
U15D (9nS)
74AHCHC08
U7A (9nS)
74ACT10
U17D (9nS)
74AHCT08
DISP1
DISPLAY
ERMC240128-2 OLED
22 SIP Socket
DISPLAY CABLE
2x10 Pin HDR
1x22 Socket for Display Module
or 2x10 Pin Header
(for Ribbon Cable, w/Module pins 1&22 NC)
DMG2305UX
J1
Backplane CBL A
J2
Backplane CBL B
J5
RCBus-Z80 (0)
H8
BRD MNT
SN74LVC8T245NS
Ada-DS3231/PCF8523 RTC
I2C-RTC
RTC-SUPPORT
USB KBD
WS-RP2040-Zero
SD1
MicroSD-Socket
74LVC125AS
74AHCT04
74AHCT1G02
74LVC1G06W
3.3V Logic Section
NOTE: DCE (USB) to DTE (ZMB)
NOTE: Configure module for 5V operation
Module provides 3.3V
Copyright 2025 AESilky & SMcCown
SilkyDESIGN
Sheet: /ExpIFC-SIOCTC/
File: exp-ifc.kicad_sch
Title: CTC, SIO, KBD, SD, Disp, BP80 Bus
Size: User
Date: 2026-02-07
Rev: PR8.2.A
KiCad E.D.A. 9.0.7
Id: 3/4

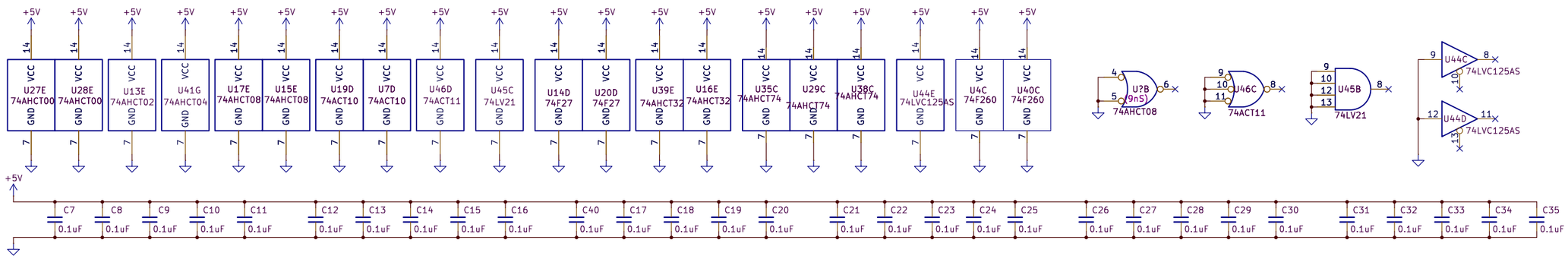

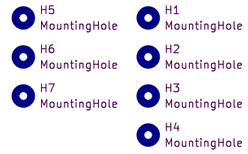

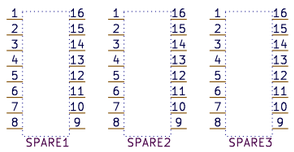

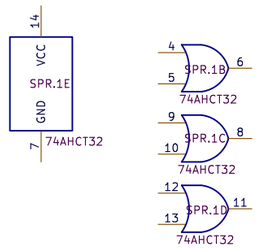

MicroSystem Z80 w/Front Panel & RC2014 Bus

Copyright 2025 AESilky & SMcCown

SilkyDESIGN

Sheet: /LOGIC_PWR_SPARES/
File: logic_pwr_spr.kicad_sch

Title: Logic Power & Spares

Size: User	Date: 2026-02-07	**Rev: PR8.2.A**
KiCad E.D.A. 9.0.7		Id: 4/4