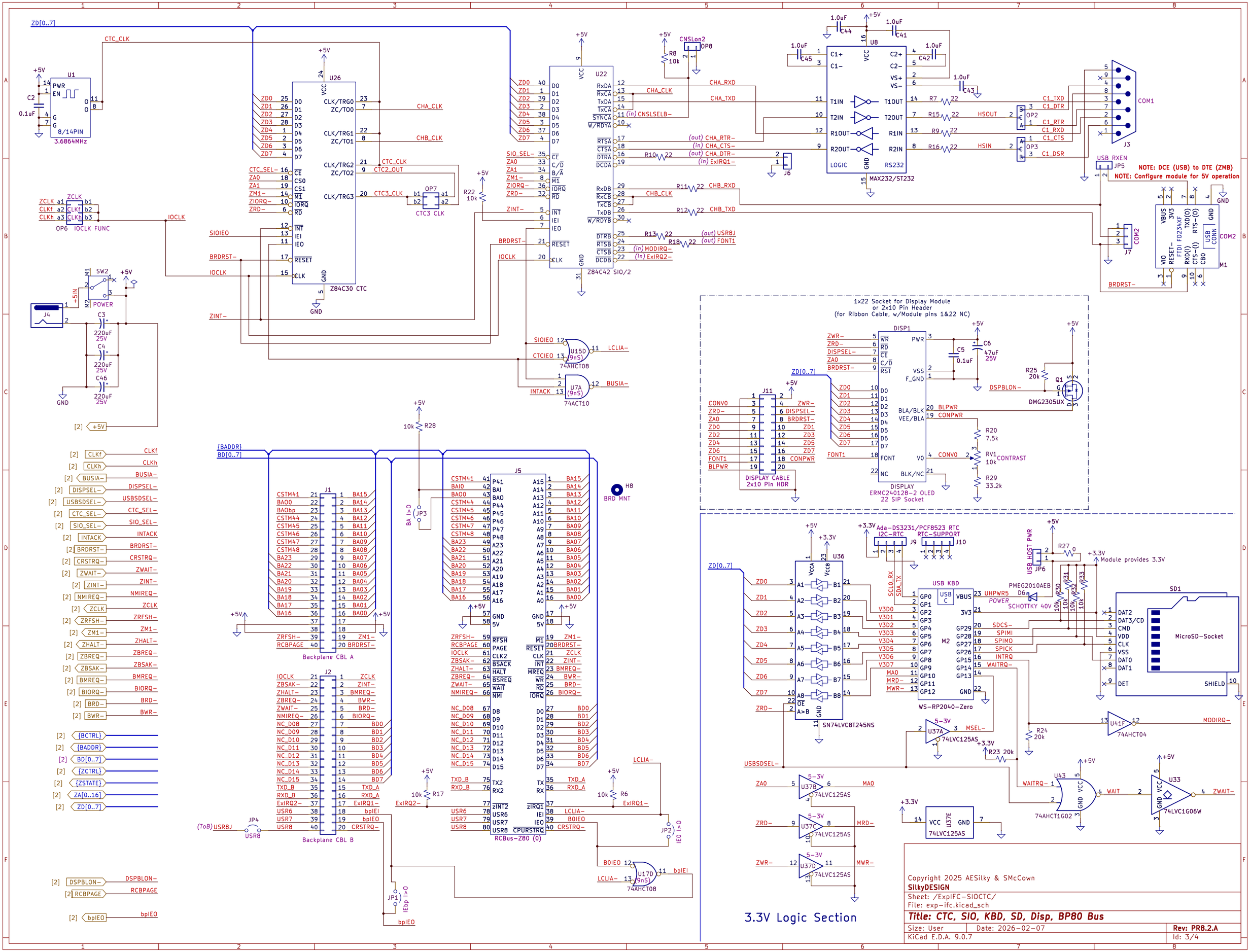
U1
PWR
EN
8/14PIN
3.6864MHz
U26
CLK/TRG0
ZC/TO0
CLK/TRG1
ZC/TO1
CLK/TRG2
ZC/TO2
CLK/TRG3
Z84C30 CTC
U22
Z84C42 SIO/2
U8
MAX232/ST232
LOGIC
RS232
COM1
J3
COM2
J7
M1
USB CONN
FTDI FD234XF
OP6 IOCLK FUNC
SW2
POWER
J4
U15D (9nS)
74AHCHC08
U7A (9nS)
74ACT10
U17D (9nS)
74AHCT08
DISP1
DISPLAY
ERMC240128-2 OLED
22 SIP Socket
DISPLAY CABLE
2x10 Pin HDR
1x22 Socket for Display Module
or 2x10 Pin Header
(for Ribbon Cable, w/Module pins 1&22 NC)
DMG2305UX
J1
Backplane CBL A
J2
Backplane CBL B
J5
RCBus-Z80 (0)
H8
BRD MNT
SN74LVC8T245NS
Ada-DS3231/PCF8523 RTC
I2C-RTC
RTC-SUPPORT
USB KBD
WS-RP2040-Zero
SD1
MicroSD-Socket
74LVC125AS
74AHCT04
74AHCT1G02
74LVC1G06W
3.3V Logic Section
NOTE: DCE (USB) to DTE (ZMB)
NOTE: Configure module for 5V operation
Module provides 3.3V
Copyright 2025 AESilky & SMcCown
SilkyDESIGN
Sheet: /ExpIFC-SIOCTC/
File: exp-ifc.kicad_sch
Title: CTC, SIO, KBD, SD, Disp, BP80 Bus
Size: User
Date: 2026-02-07
Rev: PR8.2.A
KiCad E.D.A. 9.0.7
Id: 3/4