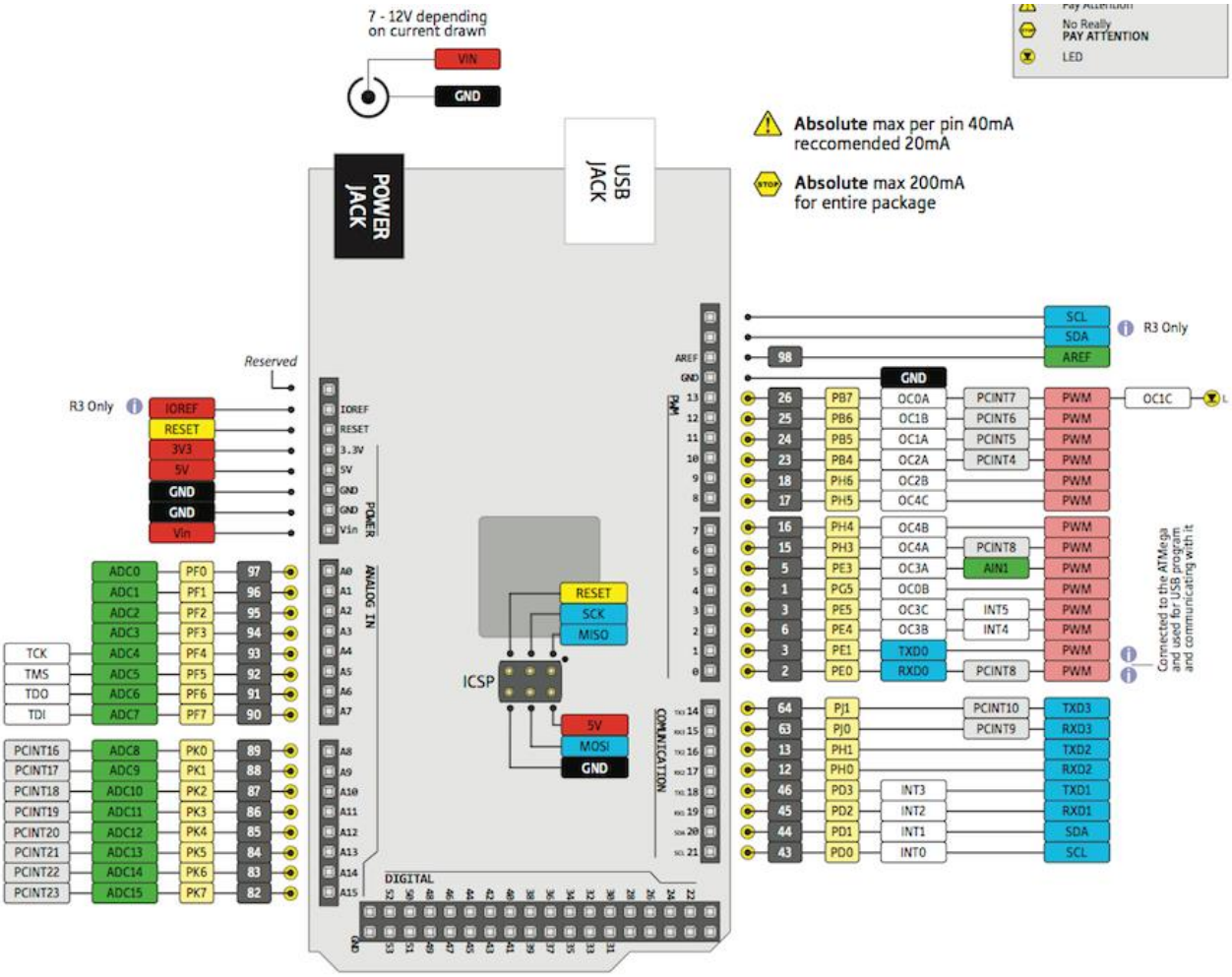
7 - 12V depending on current drawn
VIN
GND
POWER JACK
USB JACK
Pay Attention
No Really PAY ATTENTION
LED
Absolute max per pin 40mA reccomended 20mA
Absolute max 200mA for entire package
Reserved
R3 Only
IOREF
RESET
3V3
5V
GND
GND
Vin
POWER
ANALOG IN
DIGITAL
COMUNICATION
ICSP
RESET
SCK
MISO
5V
MOSI
GND
SCL
SDA
AREF
GND
Connected to the ATMega and used for USB program and communicating with it

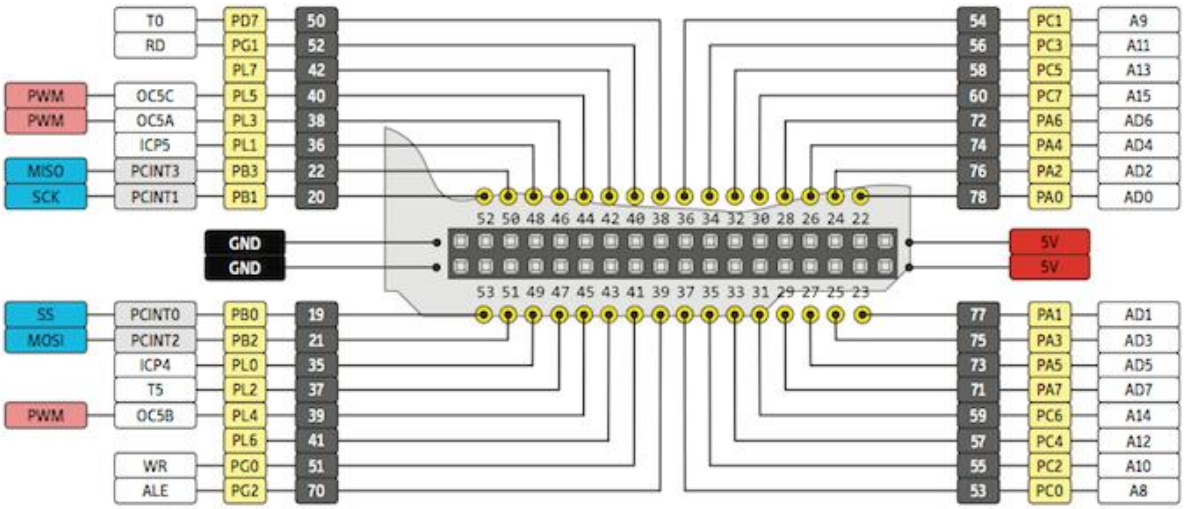
GND
GND
5V
5V