End Sem

NATIONAL INSTITUTE OF TECHNOLOGY PATNA

END SEM EXAM 2024 B. Tech Sem-I, Elements of Electronics (EC16102), 3 hour, 60 marks

*Attempt all the questions.*

**Q1 attempt all (20 marks)**

i. The reverse saturation current is of $20\mu A$ in a PN junction diode at room temperature. What will be its values after 20° rise in the temperature? (2 marks, BL: L3, PO: 2)

ii. Draw the circuit of positive clipper with the offset value of 2V and explain its operation. (2 marks, BL: L2, PO: 1)

iii. Define the stability factor and its dependency on the different parameters. (2 marks, BL: L2, PO: 1)

iv. Derive the relation between the current gain of the CB and CE configurations of BJT. (2 marks, BL: L2, PO: 2)

v. What is the difference between enhancement and depletion type MOSFET. (2 marks, BL: L2, PO: 1)

vi. Find the value of drain current at Q-point if maximum drain current is $2A$, applied $V_{gs} = -4V$ and pinch-off voltage is $-8V$. Validate it by showing the Q-point on the characteristics. (2 marks, BL: L3, PO: 3)

vii. Write the name of parameters of Op-Amp and their ideal and practical values (**five at least**). (2 marks, BL: L2, PO: 1)

viii. What do you mean by the virtual short and virtual ground condition. (2 marks, BL: L2, PO: 2)

ix. Make an electrical circuit for performing the operation of NOT gate and validate the operation (2 marks, BL: L2, PO: 1)

x. Draw a logic circuit for $f(A, B, C) = 1 + \bar{A}B + A\bar{B} + ABC + AB\bar{C}$. (2 marks, BL: L2, PO: 1)

**Q2 (a)** What are the different types of currents in the semiconductors? Explain and derive the expression for all in a PN junction diode. (2.5 marks, BL: L3, PO: 2)

**(b)** Determine the currents in each branch in the network shown in **Fig. A**. (2.5 marks, BL: L3, PO: 3)

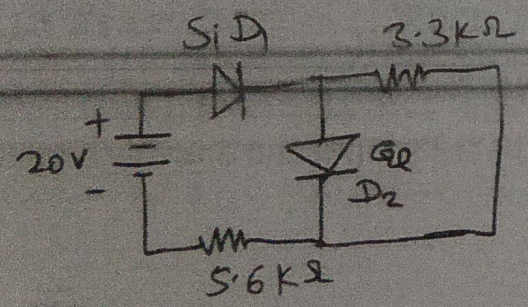


Fig. A [Q2(b)]

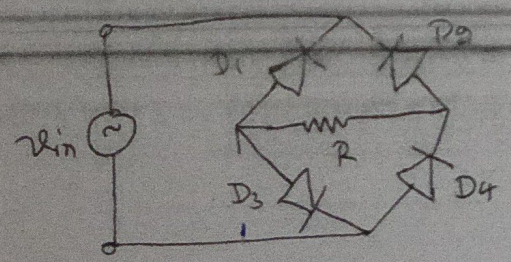


Fig. B [Q2(c)]

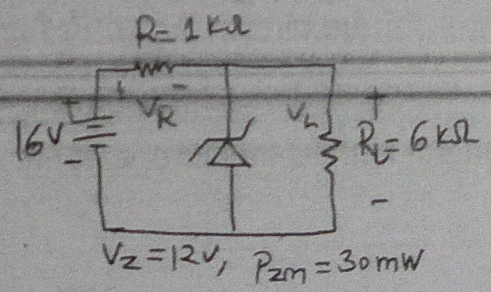


Fig. C [Q2(d)]

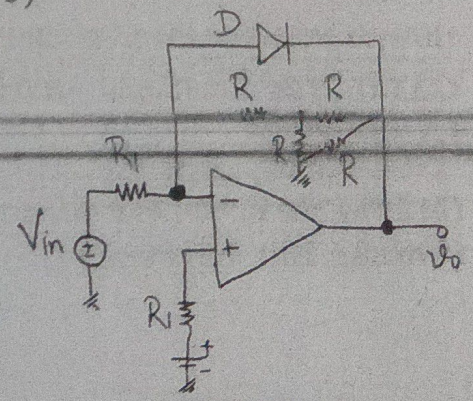


Fig. D [Q5(a)]

PTO

(c) Draw the output waveform of the circuit shown in **Fig. B**, if output voltage is calculated across the resistance $R$. Also, calculate the related performance parameters, if applicable. (2.5 marks, BL: L3, PO: 3)

(d) For the Zener diode network of **Fig. C**, determine $V_L, V_R, I_z$, and $P_Z$. (2.5 marks, BL: L3, PO: 2)

---

**Q3 (a)** Determine the Q-point for the potential divider circuit of BJT containing the circuit elements as $R_1 = 39K\Omega, R_2 = 3.9k\Omega, V_{CC} = 22V, R_c = 10k\Omega, R_E = 1.5k\Omega, \beta = 100$ and consider the values of coupling capacitors as $C_i = 10\mu F$, $C_o = 10\mu F$ and $C_E = 50\mu F$. (4 marks, BL: L3, PO: 2)

OR

Explain the Fixed Bias configuration and derive its stability factor. (4 marks, BL: L2, PO: 2)

(b) Explain the working and operation of Darlington pair. What is the need of multistage amplifier? (4 marks, BL: L2, PO: 1)

OR

What is the need of biasing? Explain with the characteristics and operation of BJT. (4 marks, BL: L2, PO: 1)

---

**Q4 (a)** Explain the working and operation of $n$ −channel enhancement type of MOSFET. Draw its characteristics. What do you mean by the channel length modulation in MOSFET? (5 marks, BL: L2, PO: 1)

(b) In a self-bias configuration of a JFET, given, $V_{DD} = 20V, R_D = 3.3k\Omega, R_s = 1k\Omega, R_{in} = 1M\Omega, V_p = -6V, I_{DSS} = 8mA$. Determine, $V_{GSQ}, I_{GQ}, V_{DS}, V_S$ and $V_G$. (5 marks, BL: L3, PO: 2)

OR

How to calculate the Q-point in potential divider configuration of JFET? (5 marks, BL: L3, PO: 2)

---

**Q5 (a)** Draw the output waveform for the circuit shown in Fig. D, $R = 2k\Omega, R_1 = 2\Omega, V_{in} = 20V$ and $V_{ref} = 2V$. (5 marks, BL: L3, PO: 2)

---

(b) Draw the circuit of a differentiator and explain its operation. Apply a signal $x(t) = 2\sin(200\pi t)$ at its input and draw its output. (5 marks, BL: L3, PO: 2)

NATIONAL INSTITUTE OF TECHNOLOGY PATNA
Department of Computer Science and Engineering
END SEMESTER EXAMINATION, July-December 2024

**Course Name: Introduction to Computing** **Semester - 1**
**Course Code: CS16105**
**Maximum Time: 3 hours** **Max. Marks: 60**

**Instructions:**

1. Attempt all questions.
2. Assume any suitable data, if necessary.
3. The marks, Course Outcome (CO) and Bloom's Level (L) related to questions are mentioned at the end of the questions.

**Q1.** Write the output of the following code snippets. In case of error write ERROR as output.
**2x10=20** marks

| | |
|---|---|
| **a.** void main( ) { [CO5] [L2]<br>int a=6, b=-3,c=0,d;<br>d=++a && ++b \|\| ++c;<br>printf("%d %d %d %d",a,b,c,d); } | **b.** void main( ) { [CO5] [L2]<br>int a=-3;<br>int k=(a++, ++a);<br>printf("%d",k); } |
| **c.** void main( ) { [CO5] [L2]<br>int a=3;<br>int x=++a+a++;<br>printf("%d %d",x, a);<br>} | **d.** void main( ) { [CO5] [L2]<br>int a=3, b=2;<br>printf("%d ",++(a – b));<br>} |
| **e.** void main( ) { [CO5] [L2]<br>int a=3, b=4, c=5;<br>if(a=b<c)<br>{ c++; a--; }<br>printf("%d %d %d ",a,b,c);<br>} | **f.** void main( ) { [CO9] [L2]<br>int a=3; int *x; x=&a;<br>// *value of* **x** *at above line is 3463220276*<br>x++;<br>printf("%u",x);} |
| **g.** void main( ) [CO6] [L2]<br>{ int arr[ ]={1,2,3,4,5};<br>int *ptr, i; ptr=arr+4;<br>for(i = 0; i < 5; i++)<br>printf("\n %d",*(ptr-i));<br>} | **h.** void main( ) [CO6] [L2]<br>{ int i,j;<br>for(i=1,j=0;i+j<=10;i++)<br>{printf("%d\t",i); j=j+3;}<br>} |
| **i.** void main( ) [CO6] [L2]<br>{ int i=0,j=0;<br>while(i<5,j<10)<br>{i++; j++;}<br>printf("%d\t %d",i,j);} | **j.** void main() [CO5] [L2]<br>{ int a=2,b=5,c=7;<br>a=b==c;<br>printf("a = %d", a);} |

**Q2. a.** What is the memory hierarchy in a computer system? Explain with diagram. 5 marks [CO1] [L1, L2]

C

**b.** Write a program to calculate the grade of a student using function ***void findGrade (int totalMarks)***. The user enters the total marks in the range of 10 to 100, that serves as an argument to the function *findGrade()*. The function show any one of the four grades depending on the total marks entered as per the following rules: 5 marks [CO8] [L3]

I. total marks in the range 90 to 100 => Grade 1
II. total marks in the range 80 to 89 => Grade 2
III. total marks in the range 70 to 79 => Grade 3
IV. total marks in the range 10 to 69 => Grade 'Average'

**P.T.O.**

Q3. a. Explain the concept of pointers in C language. How ***pointer to pointer variable*** are declared and used, and provide examples to illustrate this functionality. 5 marks [CO9] [L2]

b. Write a C program to create 3x3 matrix with user inputs and print its transpose with suitable formatting. 5 marks [CO6, CO7] [L3]

Q4. a. Explain the concepts of call by value and call by reference in functions. Show with small C code snippet to illustrate this concept. 5 marks [CO8] [L2]

b. Write a program in C to display all odd numbers within the range [1, 300] in the reverse order. 5 marks [CO6, CO7] [L3]

Q5. Write short notes on: 5x2=10 marks [CO1, CO4] [L1]

a. Types of ROM

b. Flow chart and its atleast four primary symbols

**********

# National Institute of Technology Patna

## EE16105: Elements of Electrical Engineering-I

B.Tech. End Semester Examination (July-Dec 2024)

(For Section B)

Name and Roll Number: [redacted]

Max. marks: 60

**All questions are compulsory and carry equal marks. Assume suitable data if needed.**

1. Apply a suitable method to determine the voltage (across) and current (through) each resistive element and dependent sources . **(CO:1, BL:3)**

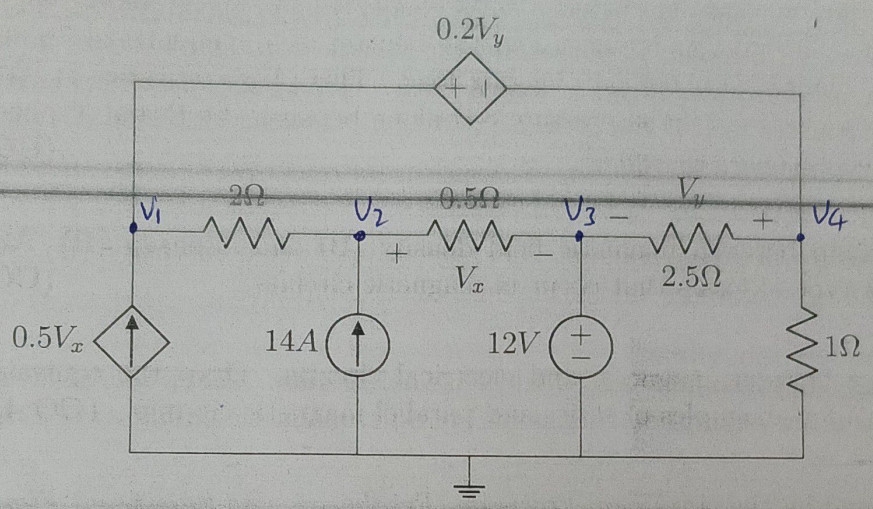


2. The first branch (from the left) in the circuit below requires 8 kVAr. Obtain the circuit's power factor, branch currents, voltage across each element, power drawn (real and reactive) by the remaining elements, and the full phasor diagram.

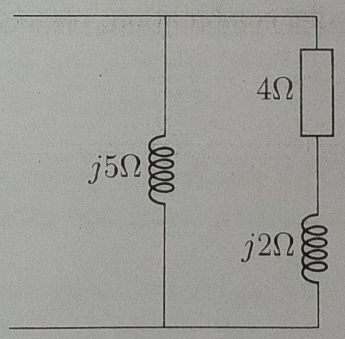


**(CO:2, BL:4)**

3. A three phase three wire system (CAB sequence) with a line voltage of $V_{BC} = 415\angle 0°\ V$, has a balanced Y- connected load of $Z_Y = 15\angle 60°\ \Omega$. The lines between the system and the load have impedances $2.24\angle 26.57°\ \Omega$. Find phase currents, and line voltages (in polar form) at the load terminals. Also, evaluate line losses and power drawn by the load. **(CO:3, BL:3)**

4. Establish the relationship between line voltage and phase voltage for the balanced star-connected three-phase system. Also, draw the phasor diagram showing angle between phase and line voltages. **(CO:3, BL:3)**

5. Determine the resonance frequency of the circuit given below. Draw the phasor diagram at resonance, displaying all voltages and currents. What will be each element's real or reactive (lagging or leading) power consumption and the circuit's equivalent resistance?

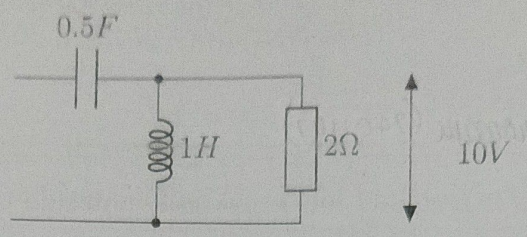


**(CO:2, BL:3)**

6. A wattmeter reads 400 W when its current coil is connected in the R phase, and its pressure coil is connected between R phase and the neutral of a symmetrical 3-phase system supplying a balanced star 0.8 p.f. lagging load. This phase sequence is RYB. What would the wattmeter read if the pressure coil alone between the B and Y phases (the remaining connections are the same)? **(CO:3, BL:4)**

7. Explain the relationship between magnetic field density (B) and intensity (H). Also, describe in detail the type of losses that occur in magnetic circuits. **(CO:4, BL:2)**

8. Establish the analogy between magnetic and electrical circuits. Draw the equivalent electrical circuits for a few examples of series and parallel magnetic circuits. **(CO:4, BL:2&3)**

9. Why do you understand by the *Accuracy, Precision, Resolution, and Significant Figures* in relation with measuring instruments? **(CO:5, BL:2)**

10. Resistance $R_1$ and $R_2$ have, respectively, nominal values of $1k\Omega$ and $0.5k\Omega$, and tolerances of $\pm 10\%$ and $\pm 20\%$. What will be the range of equivalent resistance if $R_1$ and $R_2$ are connected in series combination and parallel combination, respectively? **(CO:5, BL:3)**

Department of Physics
National Institute of Technology Patna

Branch: EE
Time: 3 hrs

FM: 60

**PH16101 ENGINEERING PHYSICS**

*Answer any five questions*

1 a Write down the Maxwell's equations in the integral and differential forms and explain their physical interpretation. 4

b Starting from Maxwell's equations derive the wave equation for electromagnetic field in empty space. 4

c The electric field in empty space is given as $\vec{E} = E_0 \exp\left(-(kx - \omega\, t)^2/2\right) \hat{j}$. Show that it solves the wave equation in empty space. 4

2 a For a linear and homogeneous dielectric obtain the ratio of bound volume charge density to the free volume charge density $\rho_b/\rho_f$, in terms of the relative permittivity $\epsilon_r$. 4

b It is given that the polarization density vector $\vec{P} = 5\,\vec{r}$ (in appropriate units) inside a neutral dielectric sphere of radius R centred at the origin. Find the bound volume charge density and the bound surface charge density. Verify that the total charge contribution of the bound charge densities remains zero. 4

c Obtain the electrostatic boundary conditions for the electric field. 4

3 a Define and discuss coherence time and coherence length for electromagnetic radiation. On its basis explain why only the first few interference fringes are visible in a two slit interference experiment with an ordinary light source. 4

b Derive and discuss, with proper diagrams, the intensity distribution in single slit Fraunhoffer diffraction. What percentage of the central maximum intensity is the second peak in intensity? 8

4 a Explain, with appropriate diagrams, the problem of ultraviolet catastrophe in black-body radiation and Planck's resolution of the problem. Clearly state the hypothesis used by Planck to derive his radiation formula. 6

b State the main hypothesis Einstein advanced to explain the photoelectric effect. 2

c The work function of tungsten surface is 5.4 ev. When the surface is illuminated by a light of wavelength 175 nm, the maximum photoelectron energy is 1.7 ev. Find Planck's constant from this. Take $e = 1.6 \times 10^{-19}$ C. 2

d A human eye can detect as low as $1.0 \times 10^{-18}$ Joules of electromagnetic energy. How many 600 nm photons does this represent. 2

5 a State and explain the Heisenberg's uncertainty principle. A hydrogen atom is $5.3 \times 10^{-11}$ m in radius. Use the uncertainty principle to estimate the minimum energy an electron can have in this atom. 6

b Write down the time independent Schrodinger's equation for a free particle trapped in a 1 D potential box. Solve it to obtain the energy eigenvalues and the normalized wavefunction. 6

6 a Explain the terms (i) Stimulated Emission (ii) Population Inversion 6

b Explain the working of a Ruby laser. 6

7 Write short notes on:

a Davisson Germer Experiment 4

b He-Ne Laser 4

c Displacement Current 4

***** 6/12/2024 *****

# NATIONAL INSTITUTE OF TECHNOLOGY PATNA
## END SEMESTER EXAMINATION, JULY-DEC 2024

**Program:** B. Tech **Semester:** 1 **Department:** HSS

**Course Code:** HS12101 (B) & HS111101, HS16101 (B), HS19101

**Branch:** ME & MEA and EE & Chem Tech.

**Course Name:** Communicative English

**Full Marks:** 45 **Duration of Examination:** 3 Hours

---

### Section A

Short Answer Questions. Each question carries one mark. 10M

1. Create a new word by combining the prefix "bio-" with a suitable root word and define its meaning.
2. Form a noun from the verb "to educate" and use it in a sentence.
3. Give the antonyms of the words: optimist, expand.
4. Give synonyms of the words: identical, creek.
5. Give two sentences using the homophones "bare" and "bear" correctly, highlighting their meanings.
6. Differentiate between "affect" and "effect" by giving their meaning and using each correctly in a sentence.
7. What is the one-word substitution for
   a) a person who studies insects
   b) a platform for speakers or conductors
8. Use the following phrasal verbs in a sentence:
   a) Carry out
   b) Put off
9. Give the meaning of the following idioms and use it in a sentence:
   a) Through thick and thin
   b) Bite the bullet
10. From the following list of names, identify which one is an eponym and briefly explain its significance:
    a) Ohm
    b) Einstein
    c) Curie
    d) Gravity

### Section B

Answer the following Questions. Each question carries one mark. 7 M

1. Rewrite the following sentence to improve clarity:
"The engineer who was late to the meeting because of traffic he missed the important discussion."

2. Which of the following sentences is grammatically correct?
a) The list of items are on the table.
b) The group of students were excited about the trip.
c) The team is winning the championship.
d) The data were analyzed carefully.

3. Convert the following active voice sentence to passive voice:
"The technician repaired the machine."

4. Convert this direct speech into indirect speech:
"She said, 'I will finish my project tomorrow.'

5. Identify and correct the punctuation error in this sentence:
"My favorite subjects are mathematics physics and chemistry."

6. Identify the error in this sentence:
"Each of the students have submitted their assignments on time.

7. Choose the correct modal verb to complete this sentence:
"You _____ (must/can) submit your application by Friday if you want to be considered for the scholarship."

## Section C

Answer the following questions. 8 M

1. Differentiate between voiced and voiceless consonants by providing three examples for each category. (4 marks)

2. What is communication skill and why is it important for everyday life? Discuss the types. (4 marks)

## Section D

Long Answer Questions. 20 M

1. Explain Johari Window and its application within an organization. (10 marks)

OR

2. Explain the Eisenhower Matrix Technique of Time Management. How can you utilize this technique in your everyday life? (10 marks)

3. Write a job application for a job posting you saw on LinkedIn regarding post of a Robotics Engineer at McKinsey. Follow the proper format. (10 marks)

OR

4. What is a resume? Discuss all the important features of a resume. (10 marks)