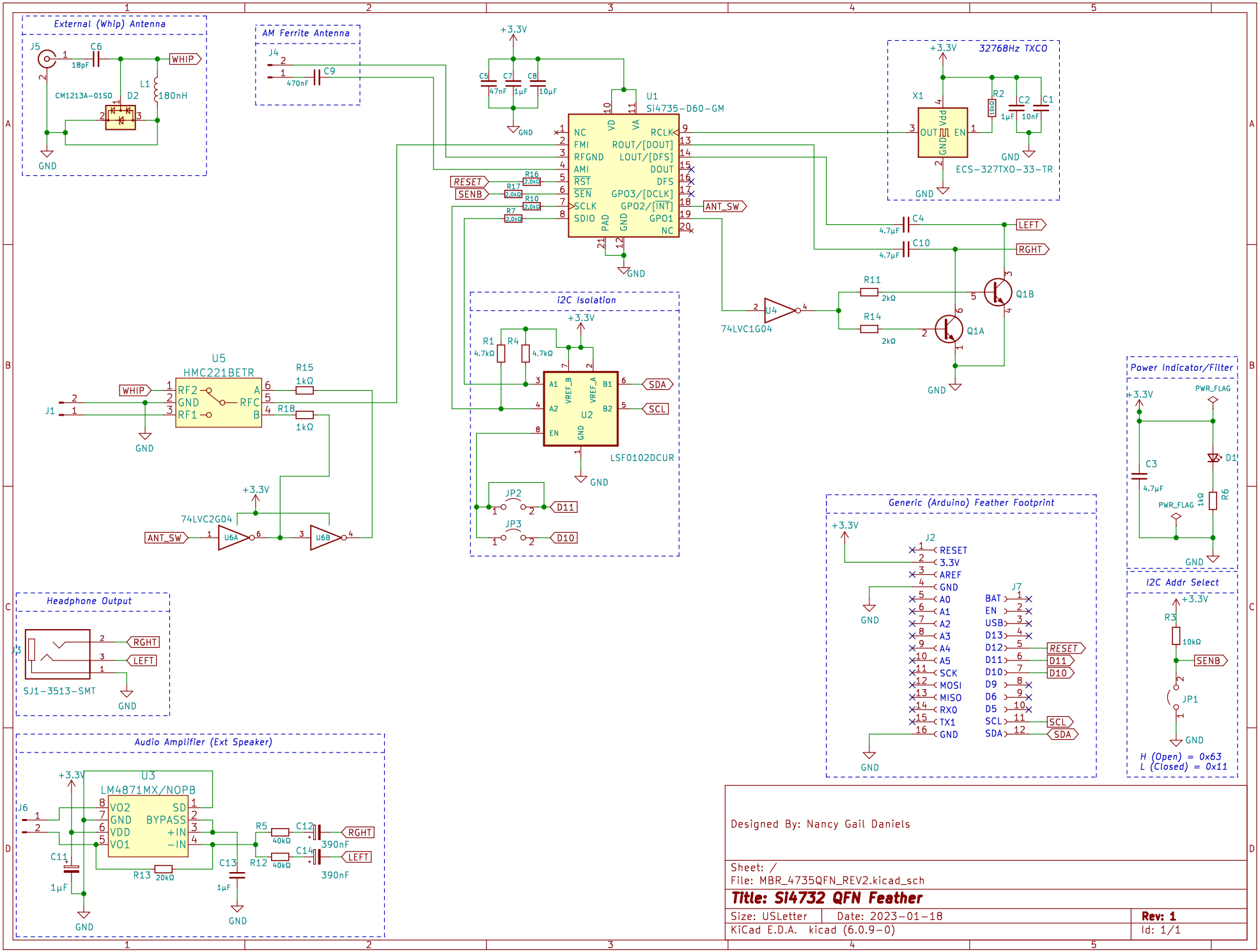
External (Whip) Antenna
J5
C6
18pF
WHIP
CM1213A-01SO
D2
L1
180nH
GND
AM Ferrite Antenna
J4
C9
470nF
+3.3V
C5
47nF
C7
1µF
C8
10µF
GND
U1
Si4735-D60-GM
NC
FMI
RFGND
AMI
RST
SEN
SCLK
SDIO
VD
VA
RCLK
ROUT/[DOUT]
LOUT/[DFS]
DOUT
DFS
GPO3/[DCLK]
GPO2/[INT]
GPO1
NC
PAD
GND
RESET
SENB
R16
2.0kΩ
R17
2.0kΩ
R10
2.0kΩ
R7
2.0kΩ
ANT_SW
32768Hz TXCO
X1
OUT
GND
Vdd
EN
R2
10kΩ
C2
1µF
C1
10nF
ECS-327TXO-33-TR
C4
4.7µF
C10
4.7µF
LEFT
RGHT
R11
2kΩ
R14
2kΩ
Q1B
Q1A
U4
74LVC1G04
U5
HMC221BETR
RF2
GND
RF1
RFC
A
B
J1
R15
1kΩ
R18
1kΩ
74LVC2G04
U6A
U6B
i2C Isolation
R1
4.7kΩ
R4
4.7kΩ
A1
A2
EN
VREF_B
VREF_A
B1
B2
U2
LSF0102DCUR
SDA
SCL
JP2
JP3
D11
D10
Power Indicator/Filter
PWR_FLAG
C3
4.7µF
D1
R6
1kΩ
Generic (Arduino) Feather Footprint
J2
RESET
3.3V
AREF
GND
A0
A1
A2
A3
A4
A5
SCK
MOSI
MISO
RX0
TX1
GND
J7
BAT
EN
USB
D13
D12
D11
D10
D9
D6
D5
SCL
SDA
I2C Addr Select
R3
10kΩ
JP1
H (Open) = 0x63
L (Closed) = 0x11
Headphone Output
J3
SJ1-3513-SMT
Audio Amplifier (Ext Speaker)
U3
LM4871MX/NOPB
VO2
GND
VDD
VO1
SD
BYPASS
+IN
-IN
J6
C11
1µF
R13
20kΩ
C13
1µF
R5
40kΩ
R12
40kΩ
C12
390nF
C14
390nF
Designed By: Nancy Gail Daniels
Sheet: /
File: MBR_4735QFN_REV2.kicad_sch
Title: SI4732 QFN Feather
Size: USLetter
Date: 2023-01-18
Rev: 1
KiCad E.D.A. kicad (6.0.9-0)
Id: 1/1