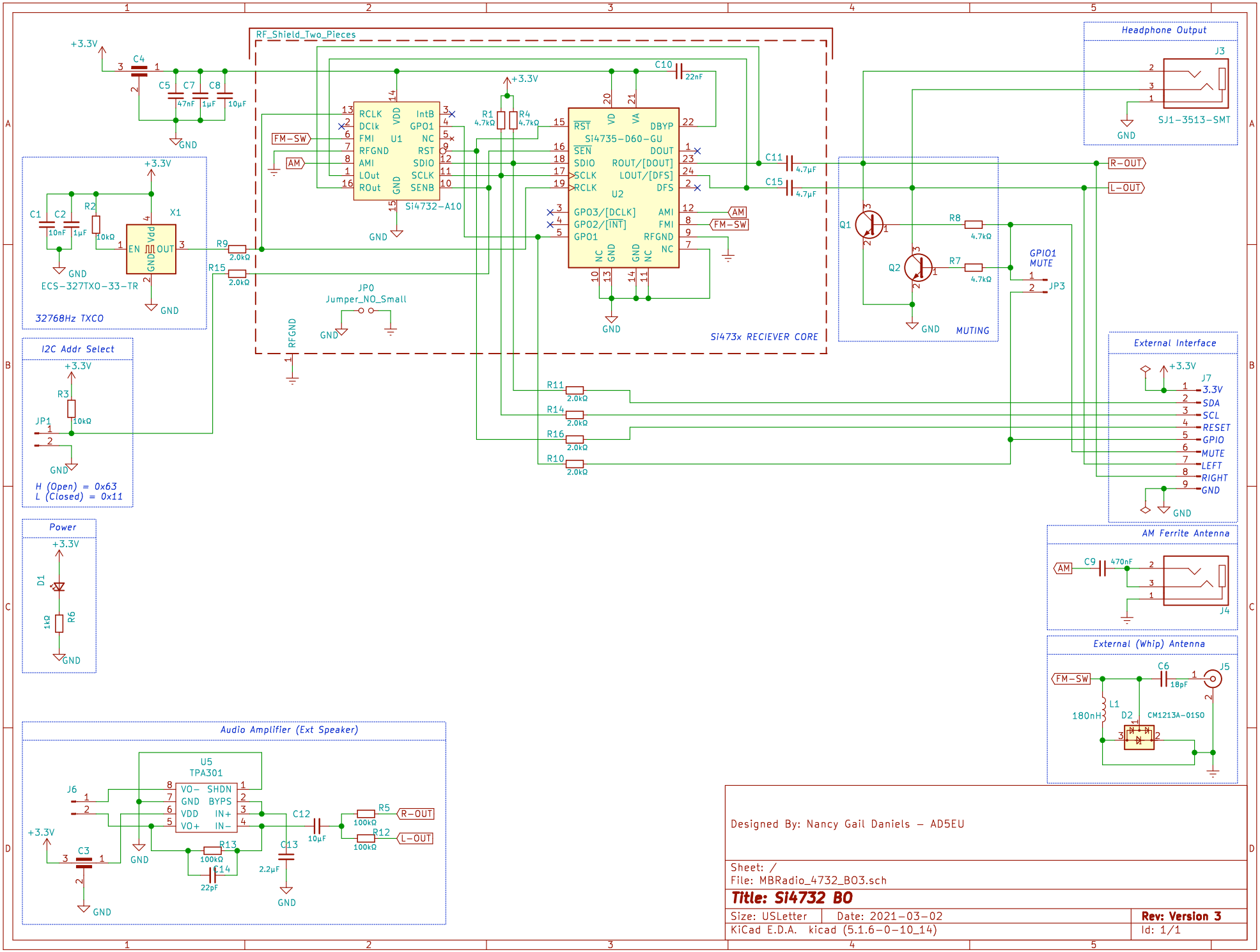
RF_Shield_Two_Pieces
Si4732-A10
Si4735-D60-GU
Si473x RECIEVER CORE
Headphone Output
SJ1-3513-SMT
32768Hz TXCO
ECS-327TXO-33-TR
I2C Addr Select
H (Open) = 0x63
L (Closed) = 0x11
Power
MUTING
GPIO1
MUTE
External Interface
AM Ferrite Antenna
External (Whip) Antenna
CM1213A-01SO
Audio Amplifier (Ext Speaker)
TPA301
Designed By: Nancy Gail Daniels – AD5EU
Sheet: /
File: MBRadio_4732_BO3.sch
Title: Si4732 BO
Size: USLetter
Date: 2021-03-02
Rev: Version 3
KiCad E.D.A. kicad (5.1.6-0-10_14)
Id: 1/1