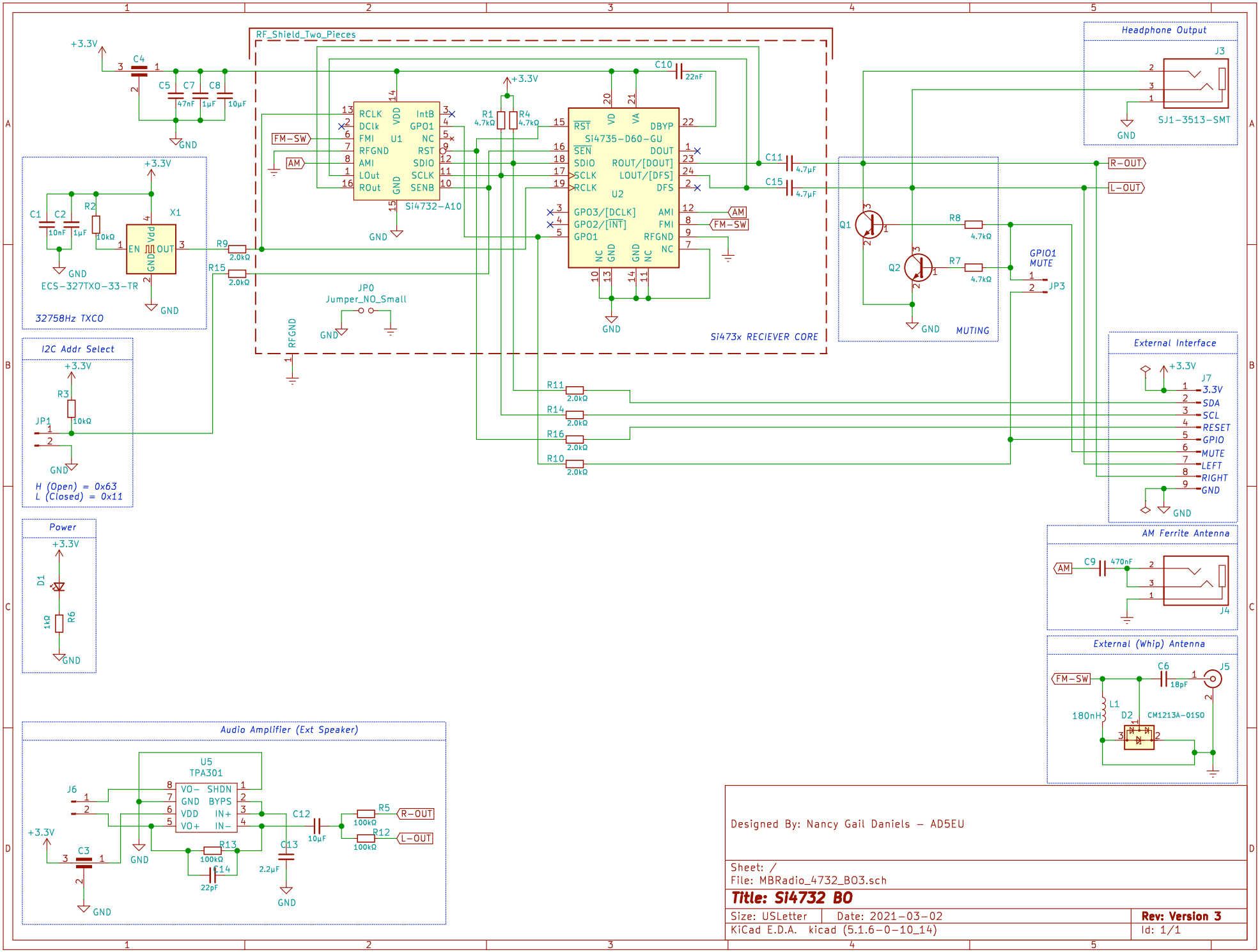

Designed By: Nancy Gail Daniels – AD5EU

Sheet: /
File: MBRadio_4732_BO3.sch

Title: Si4732 BO

Size: USLetter	Date: 2021-03-02	Rev: Version 3
KiCad E.D.A. kicad (5.1.6-0-10_14)		Id: 1/1