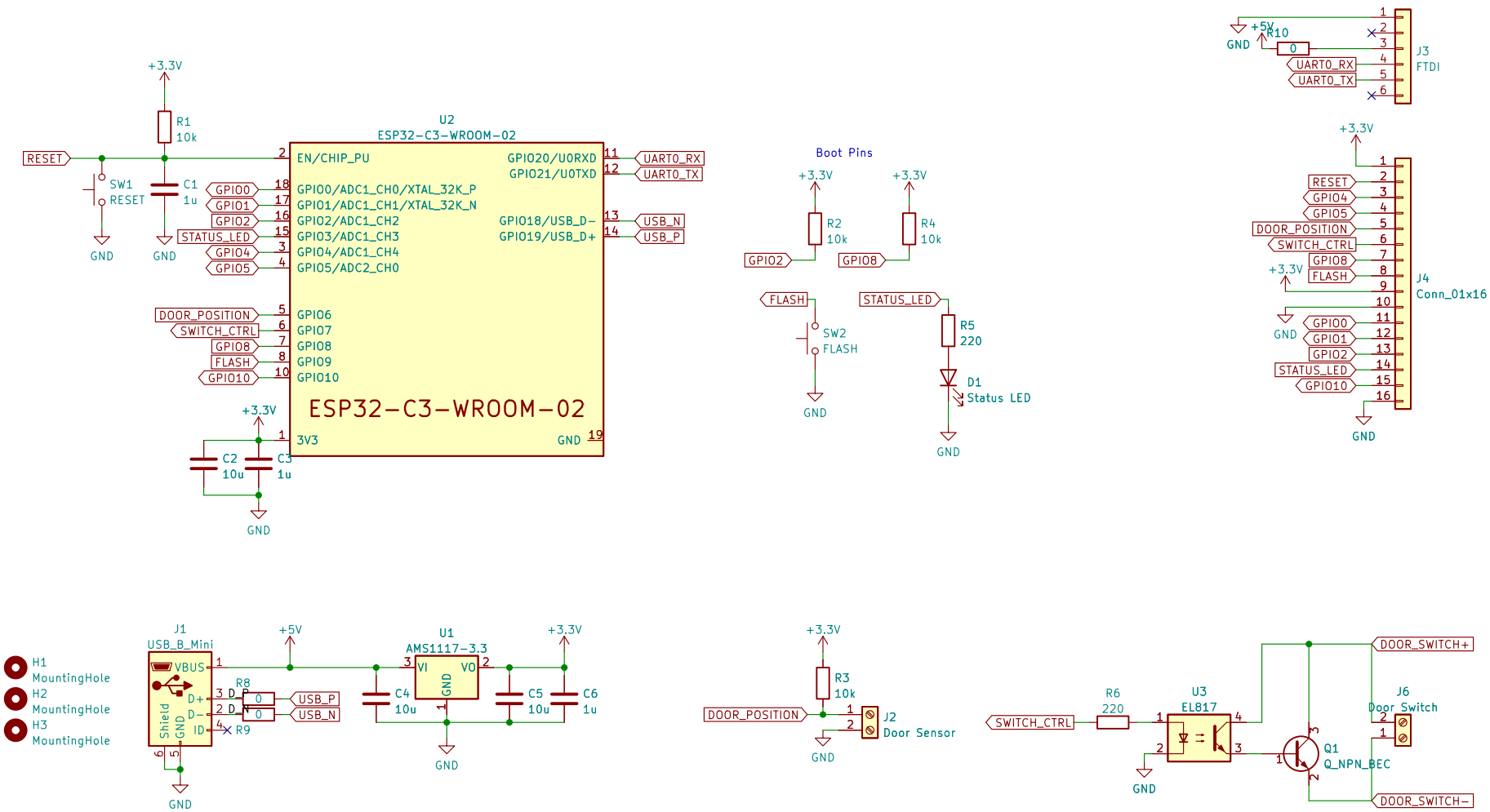

Design for JLCPCB 1-2 Layer Service

Sheet: /
File: GarageDoorOpener.kicad_sch

Title:

Size: USLetter	Date:	**Rev: 1**
KiCad E.D.A. kicad (6.0.9-0)		Id: 1/1