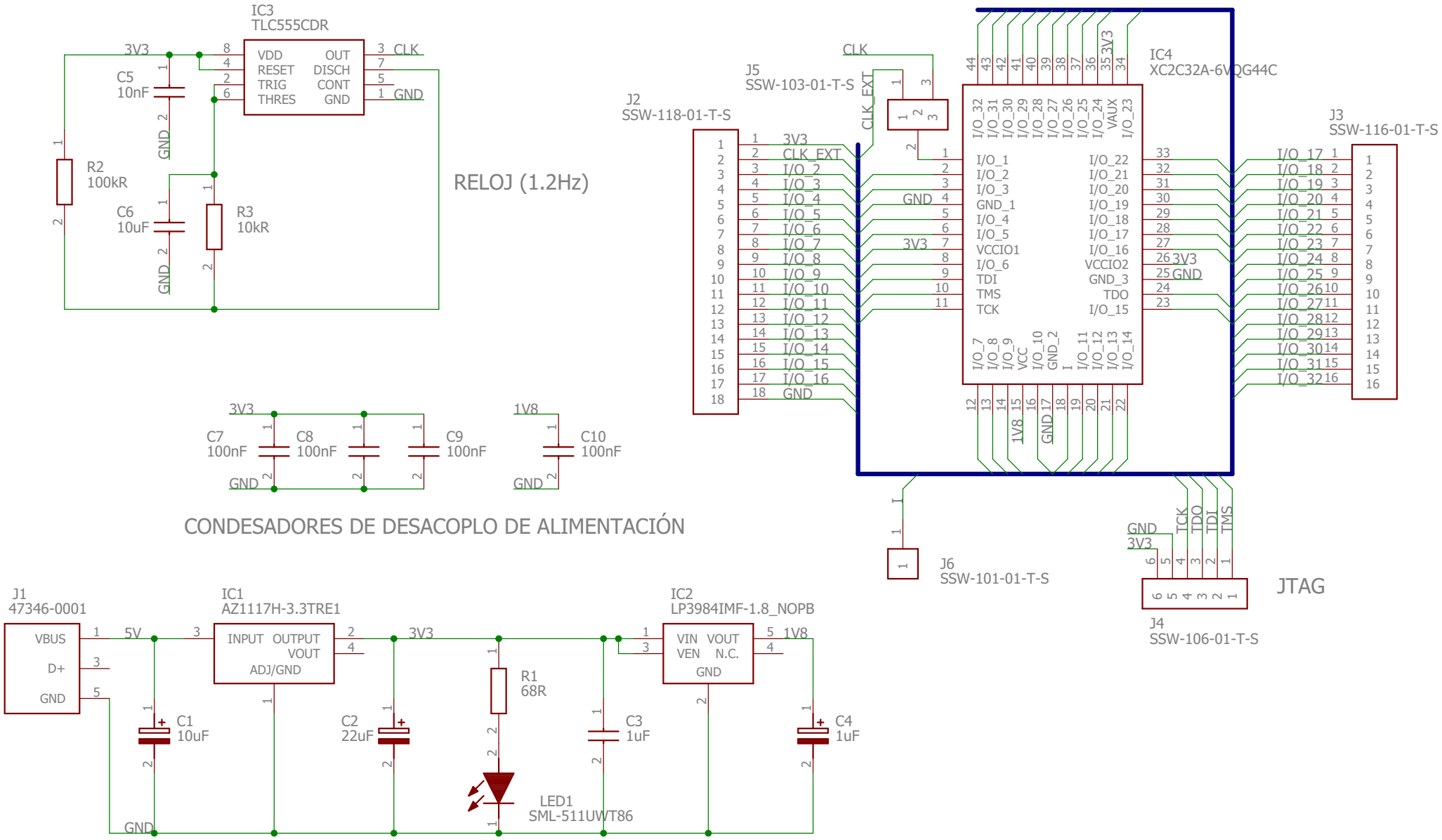

CPLD_GND

04/03/2022 14:17

Sheet: 1/1