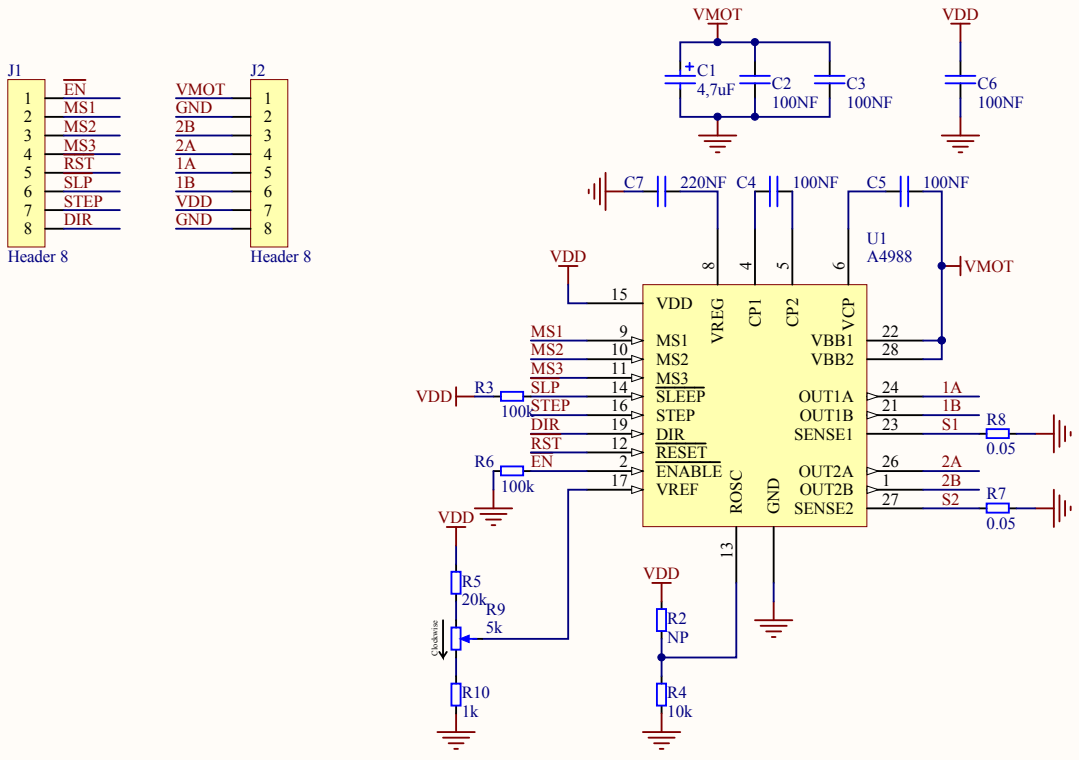

Title		
Size A4	Number	Revision
Date: 28-10-2013	Sheet of	
File: C:\Users\..\A4988.SchDoc	Drawn By:	

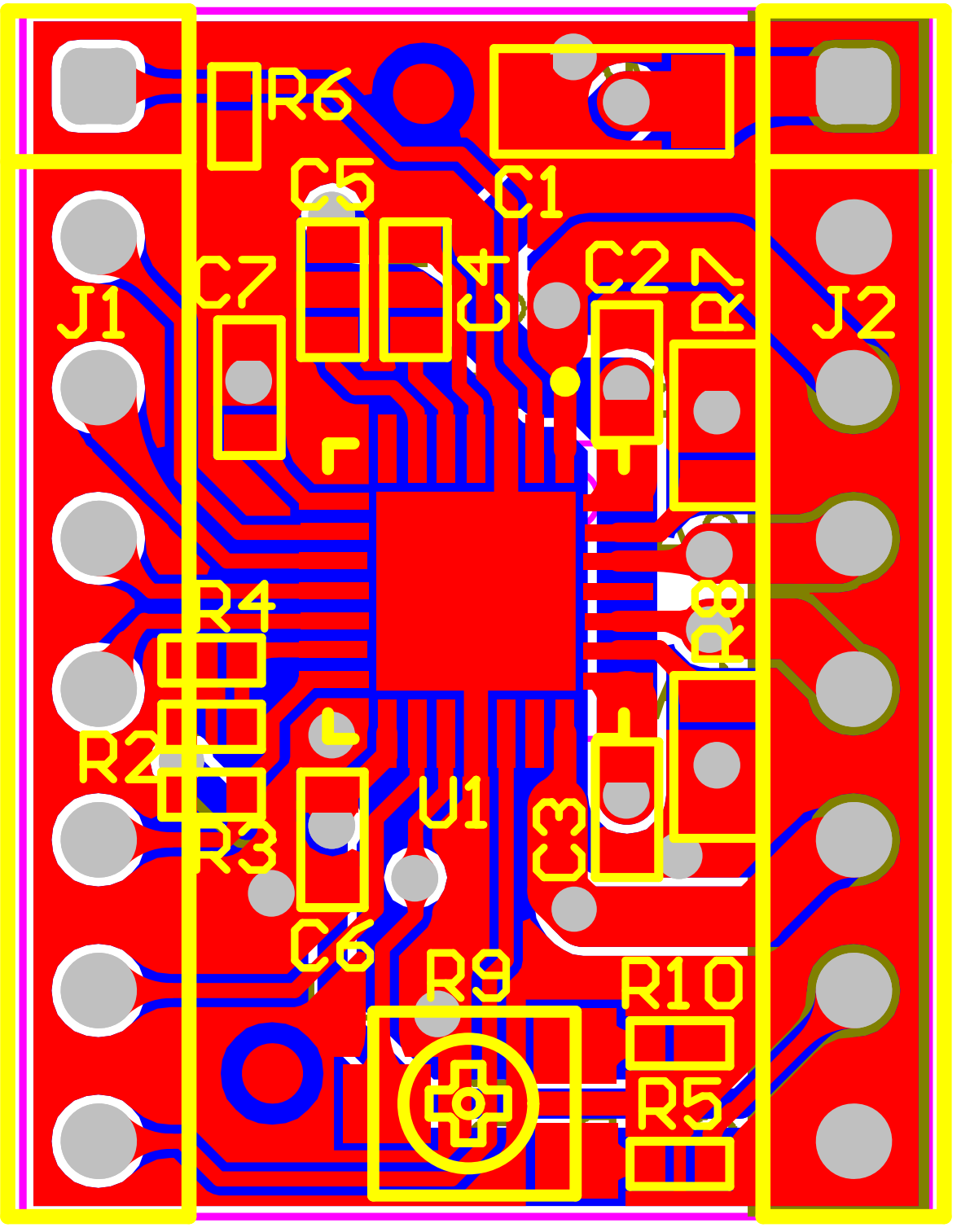
R6
C5
C1
C7
C4
C2
R7
J1
J2
R4
R8
R2
U1
R3
C3
C6
R9
R10
R5