REVISIONS				
ZONE	REV.	DESCRIPTION	DATE	APPROVED
A2, B1	A	ALL FILLETS HAVE A R .010	5/8/2022	AT

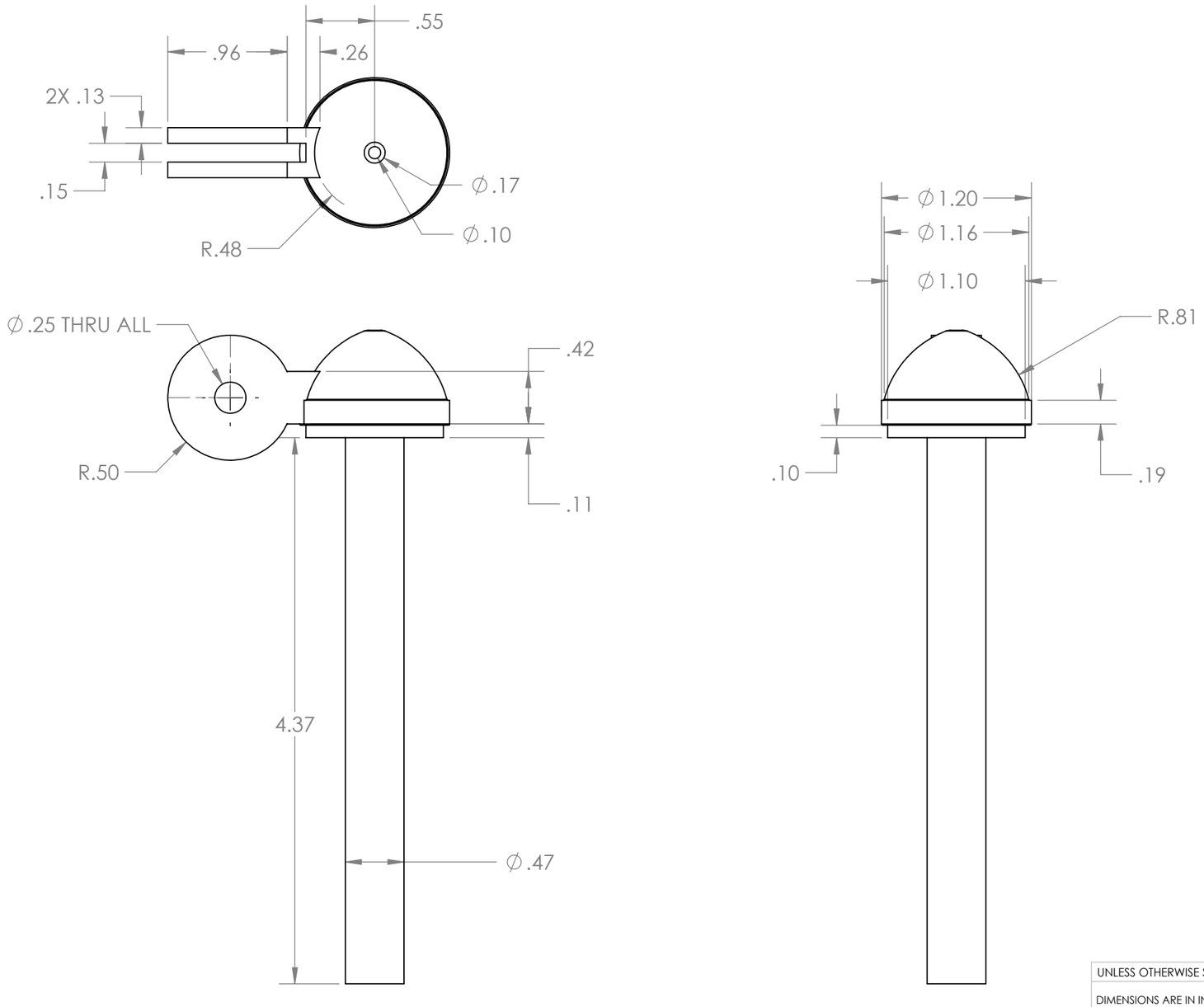

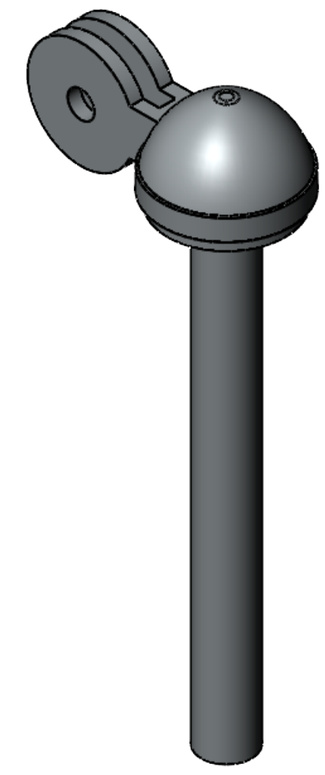

PROPRIETARY AND CONFIDENTIAL

THE INFORMATION CONTAINED IN THIS DRAWING IS THE SOLE PROPERTY OF CHAFFEY COLLEGE. ANY REPRODUCTION IN PART OR AS A WHOLE WITHOUT THE WRITTEN PERMISSION OF CHAFFEY COLLEGE IS PROHIBITED.

NEXT ASSY	USED ON
APPLICATION	

UNLESS OTHERWISE SPECIFIED:

DIMENSIONS ARE IN INCHES
TOLERANCES:
FRACTIONAL ±1/16
ANGULAR: MACH ± .5 BEND ±1
TWO PLACE DECIMAL ±.03
THREE PLACE DECIMAL ±.010

INTERPRET GEOMETRIC TOLERANCING PER: ANSI Y14.5

MATERIAL
Chrome Stainless Steel

FINISH
NONE

DO NOT SCALE DRAWING

	NAME	DATE
DRAWN	AT	5/8/2022
CHECKED		
ENG APPR.		
MFG APPR.		
Q.A.		

COMMENTS:
A

CHAFFEY COLLEGE

TITLE:
MICROPHONE HOLDER B

SIZE	DWG. NO.	REV
B	DRFT21-4	A

SCALE: 1:1 | WT: 0.45 | SHEET 1 OF 1

SOLIDWORKS Educational Product. For Instructional Use Only.