Chapter 1

Complex Numbers

1.1 The genesis

1.1.1 Abstraction: the birth of $\mathbb{N}$

Definition 1.1. A *natural number system* is an ordered 3-tuple $(\mathbb{N}, 0, S)$ where $\mathbb{N}$ is a set whose elements are called the *natural numbers*, 0 is a distinguished element of $\mathbb{N}$ called *zero*, $S : \mathbb{N} \to \mathbb{N}$ is a 1-ary operation called the *successor function* such that the following *Peano's postulates* hold:

P1 $\forall a \in \mathbb{N}$, $S(a) \neq 0$;

P2 $S(a) = S(b) \implies a = b$;

P3 If $A \subseteq \mathbb{N}$ satisfies $0 \in A$ and $a \in A \implies S(a) \in A$, then $A = \mathbb{N}$.

Definition 1.2. An *isomorphism from* $(\mathbb{N}, 0, S)$ *to a 3-tuple* (X, z, f) where $z \in X$ and $f : X \to X$ is a bijection $h : \mathbb{N} \to X$ such that

- $h(0) = z$;
- $\forall a \in \mathbb{N}$, $h(S(a)) = f(h(a))$.

If h exists, we say that $(\mathbb{N}, 0, S)$ and (X, z, f) are *isomorphic*.

Theorem 1.3 (Dedekind)**.** The natural number system in Definition 1.1 is unique.

Definition 1.4 (Von Neumann's natural numbers)**.** *Von Neumann's natural numbers* is a natural number system constructively given by

$$0 := \emptyset; \quad S(a) = a \cup \{a\}. \tag{1.1}$$

1.1.2 Subtraction: the birth of $\mathbb{Z}$

Exercise 1.5. What would you do if you didn't know how to calculate the sum of two natural numbers, but had to compute 3+5=?

Exercise 1.6. What is the relation of subtraction to addition?

Exercise 1.7. With respect to $\mathbb{N}$, what is the crucial difference between addition and subtraction?

Definition 1.8. A *negative integer* is a number that consists of the negative sign "$-$" followed by a nonzero natural number.

Definition 1.9. The set of *integers*, denoted by $\mathbb{Z}$, is the set union of natural numbers and negative integers.

Lemma 1.10. Integers are closed under addition and subtraction.

Exercise 1.11. Prove Lemma 1.10.

1.1.3 Division: the birth of $\mathbb{Q}$

Exercise 1.12. What would you do if you did not know how to perform multiplication of natural numbers, but had to compute $3 \times 5 =$?

Exercise 1.13. What is the relation of division to multiplication?

Exercise 1.14. With respect to $\mathbb{Z}$, what is the crucial difference between multiplication and division?

Definition 1.15. A *common divisor* of two nonzero integers a, b is an integer c satisfying that there exist $d, e \in \mathbb{Z}$ such that $\frac{a}{d} = \frac{b}{e} = c$.

Definition 1.16. Two nonzero integers $a \neq b$ are said to be *relatively prime* if their largest common divisor is 1.

Definition 1.17. A *rational number* is either 0 or a number that can be expressed as the quotient $\frac{a}{b}$ of two relatively prime integers a and $b \neq 0$. The set of rational numbers is denoted by $\mathbb{Q}$.

Lemma 1.18. Nonzero rational numbers are closed under multiplication and division.

Exercise 1.19. Prove Lemma 1.18.

1.1.4 Power, root, and logarithm functions

Definition 1.20. The *nth power of a number* c is the multiplication of n copies of c, written c^n, where c is called the *base* and n the *component*.

Example 1.21. $5^2 = 5 \times 5 = 25$; $5^4 = 5^2 \times 5^2 = 25 \times 25 = 625$.

Exercise 1.22. What is the relation between power and multiplication?

Definition 1.23. The *nth root of a number* b, written $b^{\frac{1}{n}}$ or $\sqrt[n]{b}$, is the number c satisfying $c^n = b$.

Exercise 1.24. What is the relation between power and root?

Definition 1.25. The *logarithm of* b *with base* c, written $\log_c b$, is the number n satisfying $c^n = b$.

Exercise 1.26. What is the relation between power and logarithm?

Theorem 1.27. $\sqrt{2}$ is not a rational number.

Proof. Suppose $\sqrt{2} \in \mathbb{Q}$. Then $\exists p, q \in \mathbb{Z}$ s.t. $\sqrt{2} = \frac{p}{q}$, i.e. $p^2 = 2q^2$. Since p^2 is even, p is even. There exists $s \in \mathbb{Z}$ such that $p = 2s$, which implies $q^2 = 2s^2$, which further implies q is even. But the conclusion of both p and q being even contradicts Definitions 1.17 and 1.16. □

1.1.5 Rational Cauchy sequences (RCSs): the birth of $\mathbb{R}$

Exercise 1.28. For a sequence of $\{x_n \in \mathbb{Q}\}$ with $x_0 = 2$, prove that

$$x_{n+1} = \frac{x_n}{2} + \frac{1}{x_n} \;\Rightarrow\; \lim_{n\to\infty} x_n = \sqrt{2}. \tag{1.2}$$

Definition 1.29. Two RCSs $\{a_n\}$ and $\{b_n\}$ are *equivalent* iff $\lim_{n\infty}(a_n - b_n) = 0$. In this case we write $\{a_n\} \sim \{b_n\}$.

Exercise 1.30. Prove that Definition 1.29 gives an equivalence relation (in the sense of Definition A.36) on the set of all RCSs.

Definition 1.31. The equivalence class of an RCS $\{s_n\}$ is the set of RCSs

$$\overline{\{s_n\}} := \big\{\{v_n\} : \{v_n\} \text{ is a RCS and } \{v_n\} \sim \{s_n\}\big\}. \tag{1.3}$$

Definition 1.32. Real numbers, denoted by $\mathbb{R}$, are equivalence classes that partition the set of all RCSs, i.e.,

$$\mathbb{R} := \left\{\overline{\{s_n\}} : \{s_n\} \text{ is a RCS}\right\}. \tag{1.4}$$

Definition 1.33. The *addition and multiplication of two real numbers* $s = \overline{\{s_n\}}$ and $v = \overline{\{v_n\}}$ are given by

$$s + v = \overline{\{s_n + v_n\}}, \qquad s \cdot v = \overline{\{s_n \cdot v_n\}}. \tag{1.5}$$

Exercise 1.34. Prove that (1.5) is well defined. In particular, show that different representatives of the equivalence classes s and v lead to the same result.

Definition 1.35. The *"less-than" relation on* $\mathbb{R}$ is given by

$$s < v \;:\Leftrightarrow\; \exists \epsilon > 0\; \exists M \geq 1\; \forall m \geq M,\; s_m \leq v_m - \epsilon, \tag{1.6}$$

where $s = \overline{\{s_n\}}$ and $v = \overline{\{v_n\}}$ are two real numbers. Then

$$s \leq v \;\Leftrightarrow\; s < v \text{ or } s = v. \tag{1.7}$$

Lemma 1.36. The relation "$\leq$" in (1.7) is a total order, i.e., $\forall s, v \in \mathbb{R}$ with $s \neq v$, either $s < v$ or $v < s$.

Exercise 1.37. Prove Lemma 1.36.

Definition 1.38. The *absolute value of a real number* is given by

$$\forall s = \overline{\{s_n\}} \in \mathbb{R}, \qquad |s| := \overline{\{|s_n|\}}. \tag{1.8}$$

Theorem 1.39 (Cauchy 1821)**.** A sequence of real numbers is convergent (with a real number as its limit) if and only if it is a Cauchy sequence.

Exercise 1.40. Prove Theorem 1.39 via the viewpoint of Definition 1.32.

Lemma 1.41. $\mathbb{R}$ is closed under $+, -, \times$, and $\div$. $\mathbb{R}^+$ (but not $\mathbb{R}$) is closed under $\sqrt[n]{\cdot}$ if n is an even integer.

Exercise 1.42. Prove Lemma 1.41.

1.1.6 Cubic equations: the birth of $\sqrt{-1}$

Definition 1.43. The *quadratic equation of one unknown* is an equation of the form

$$ax^2 + bx + c = 0, \tag{1.9}$$

which, in the case of $a \neq 0$, is equivalent to

$$x^2 - mx - k = 0. \tag{1.10}$$

Exercise 1.44. The solution of the quadratic equation can be interpreted as the intersection of the parabola $y = x^2$ and the straight-line $y = mx + c$. What situation does $m^2 + 4c < 0$ correspond to?

Definition 1.45. The *cubic equation of one unknown* is an equation of the form

$$X^3 + AX^2 + BX + C = 0, \tag{1.11}$$

which, by the variable substitution $X = x - \frac{A}{3}$, is equivalent to

$$x^3 = 3px + 2q, \tag{1.12}$$

where p and q are algebraic expressions of A, B, C.

Formula 1.46. A solution of the cubic equation (1.12) can be found by steps as follows.

(i) $x = s + t$ is a solution of (1.12) if s, t satisfy

$$st = p, \qquad s^3 + t^3 = 2q;$$

(ii) the above equation yields a quadratic equation on s^3;

(iii) we solve the quadratic equation to get s and t;

(iv) a solution of (1.12) is then

$$x = \sqrt[3]{q + \sqrt{q^2 - p^3}} + \sqrt[3]{q - \sqrt{q^2 - p^3}}.$$

Example 1.47. Find a solution for $x^3 = 6x + 6$.

Exercise 1.48. What is the crucial difference between the two cubic equations $x^3 = 6x + 6$ and $x^3 = 15x + 4$?

Exercise 1.49. For (1.12), what situation does $q^2 - p^3 < 0$ correspond to? What is the crucial difference between this situation and that of $m^2 + 4c < 0$ for quadratic equations?

1.2 The field $\mathbb{C}$ of complex numbers

Theorem 1.50. There exists a field $\mathbb{C}$ such that

(a) the field $\mathbb{R}$ of real numbers is a subfield of $\mathbb{C}$, i.e., $\mathbb{R} \subset \mathbb{C}$ and addition and multiplication in $\mathbb{R}$ are the restrictions to $\mathbb{R}$ of the addition and multiplication in $\mathbb{C}$;

(b) in $\mathbb{C}$ the equation $X^2 + 1 = 0$ has exactly two solutions $+\mathbf{i}$ and $-\mathbf{i}$;

(c) the following map is a bijection:

$$(x, y) \mapsto x + \mathbf{i}y : \qquad \mathbb{R} \times \mathbb{R} \to \mathbb{C}. \tag{1.13}$$

Proof. Define addition and multiplication on $\mathbb{R} \times \mathbb{R}$ as

$$(x, y) + (u, v) := (x + u, y + v), \tag{1.14a}$$
$$(x, y) \cdot (u, v) := (xu - yv, xv + yu). \tag{1.14b}$$

It follows from Definition A.32, Definition C.1, and (1.14) that $\mathbb{R} \times \mathbb{R}$ is a field with its additive identity as $(0, 0)$ and its multiplicative identity as $(1, 0)$. Denote $\mathbf{i} := (0, 1)$. Then $\mathbf{i}$ and $-\mathbf{i}$ are the two solutions of $X^2+1 = 0$. The last statement of (c) holds because $(1, 0)$ and $\mathbf{i}$ form an orthogonal basis of the linear space $\mathbb{R}^2$. □

Definition 1.51. In the unique representation of a complex number $z = x + \mathbf{i}y$ in (1.13), $x \in \mathbb{R}$ and $y \in \mathbb{R}$ are respectively the *real part* and the *imaginary part* of z, respectively denoted by $\operatorname{Re} z$ and $\operatorname{Im} z$.

Definition 1.52. The field of *complex numbers* is the field $\mathbb{C}$ in Theorem 1.50, with their addition and multiplication given by

$$(x + \mathbf{i}y) + (u + \mathbf{i}v) := (x + u) + \mathbf{i}(y + v), \tag{1.15a}$$
$$(x + \mathbf{i}y)(u + \mathbf{i}v) := (xu - yv) + \mathbf{i}(xv + yu). \tag{1.15b}$$

1.2.1 $\mathbb{C}$ is not an ordered field

Definition 1.53. A field $\mathcal{F}$ is said to be *ordered* iff there exists a subset $\mathcal{P} \subset \mathcal{F}$, called *the set of positive elements* of $\mathcal{F}$, satisfying

(ODF-1) closure: $\forall x, y \in \mathcal{P}$, $x + y \in \mathcal{P}$ and $xy \in \mathcal{P}$.

(ODF-2) trichotomy: for each $x \in \mathcal{F}$, one and only one of $x = 0$, $x \in \mathcal{P}$, and $x \in -\mathcal{P}$ is true.

Lemma 1.54. An ordered field $\mathcal{F}$ satisfies

$$\forall x \in \mathcal{F}, \qquad x^2 := x \cdot x \geq 0, \tag{1.16}$$

where the equality hold only when $x = 0$. In particular, we have $1 > 0$.

Proof. Once the set $\mathcal{P}$ of positive elements in a field has been specified, it is easier to work with inequalities than with $\mathcal{P}$: we write $x > y$ if and only if $x - y \in \mathcal{P}$; $x \geq y$ and $x < y$ are also defined similarly. The two conditions in Definition 1.53 are equivalent to

- $x > 0, y > 0$ implies $x + y > 0$ and $xy > 0$;
- for each $x \in \mathcal{F}$, one and only one of $x = 0$, $x > 0$, and $x < 0$ is true,

which completes the proof. □

Corollary 1.55. $\mathbb{R}$ is an *ordered field* while $\mathbb{C}$ is not.

Exercise 1.56. Prove Corollary 1.55.

Corollary 1.57. No real number satisfies $x^2 = -1$.

Proof. This follows directly from Corollary 1.55 and Lemma 1.54. □

1.2.2 Solving cubic and quartic equations

Example 1.58. Equipped with complex numbers, Formula 1.46 always yields a solution for any cubic equations. Take $x^3 = 15x + 4$ for an example, we have

$$x = \sqrt[3]{2 + \sqrt{-121}} + \sqrt[3]{2 - \sqrt{-121}}.$$

By (1.15), it is straightforward to verify

$$(11\mathbf{i})^2 = -121, \qquad (2 \pm \mathbf{i})^3 = 2 \pm 11\mathbf{i}.$$

Hence we have $\sqrt{-121} = \pm 11\mathbf{i}$ and

$$x = \sqrt[3]{2 + 11\mathbf{i}} + \sqrt[3]{2 - 11\mathbf{i}} = (2 + \mathbf{i}) + (2 - \mathbf{i}) = 4,$$

which is indeed a solution of $x^3 = 15x + 4$. Therefore, the definition of "complex numbers" is useful as it helps to solve realworld problems that are difficult to solve without complex numbers.

Formula 1.59. The following generic quartic equation

$$ax^4 + bx^3 + cx^2 + dx + e = 0 \tag{1.17}$$

is solved by steps as follows.

WLOG, we can assume $a = 1$. Move the quadratic, linear, and constant terms to the RHS, add $(\frac{b}{2}x)^2$ to both sides, and we have

$$x^4 + bx^3 + \frac{1}{4}b^2x^2 = \frac{1}{4}(b^2 - 4c)x^2 - dx - e.$$

Introduce another parameter $y \in \mathbb{R}$, add $(x^2 + \frac{b}{2}x)y + \frac{1}{4}y^2$ to both sides of the above equation, and we have

$$\left[x^2 + \frac{b}{2}x + \frac{1}{2}y\right]^2 = \frac{1}{4}(b^2-4c+4y)x^2+\frac{1}{2}(by-2d)x+\frac{1}{4}y^2-e.$$

The RHS is a quadratic form of x and it can be factored into a square if

$$\frac{1}{4}(by - 2d)^2 - (b^2 - 4c + 4y)\left(\frac{1}{4}y^2 - e\right) = 0,$$

which is a cubic equation of y and can be solved by Formula 1.46. Then we can get two quadratic equations, from which we obtain the four solutions of (1.17).

Exercise 1.60. Use Formula 1.59 to solve the equation

$$x^4 + 2x^3 + 2x + 1 = 0. \tag{1.18}$$

1.2.3 Complex arithmetic

Definition 1.61. The *complex conjugate* of $z = x + \mathbf{i}y$ is defined as $\overline{z} = x - \mathbf{i}y$.

Corollary 1.62. $\forall z, w \in \mathbb{C}$, we have

(1) $\overline{\overline{z}} = z$,

(2) $\overline{z \pm w} = \overline{z} \pm \overline{w}$, $\overline{zw} = \overline{z} \cdot \overline{w}$,

(3) $z \in \mathbb{R} \Leftrightarrow z = \overline{z}$, $z \in \mathbf{i}\mathbb{R} \Leftrightarrow z = -\overline{z}$.

(4) $\operatorname{Re} z = \frac{1}{2}(z + \overline{z})$, $\operatorname{Im} z = \frac{1}{2\mathbf{i}}(z - \overline{z})$,

Definition 1.63. The *absolute value* or *modulus* of a complex number $z = x + \mathbf{i}y$ is defined by

$$|z| := \sqrt{z\overline{z}} = \sqrt{x^2 + y^2} \tag{1.19}$$

Corollary 1.64. $\forall z \in \mathbb{C}$, $|\operatorname{Re} z| \le |z|$ and $|\operatorname{Im} z| \le |z|$.

Corollary 1.65. The *inverse of a complex number* $z \neq 0$ is

$$z^{-1} = \frac{\overline{z}}{|z|^2}. \tag{1.20}$$

Corollary 1.66. $\forall z, w \in \mathbb{C}$, we have

(1) $|z \cdot w| = |z| \cdot |w|$,

(2) $|z \pm w| \le |z| + |w|$,

(3) $||z| - |w|| \le |z \pm w|$.

Exercise 1.67. Construct four squares for a quadrilateral, as shown in [a].

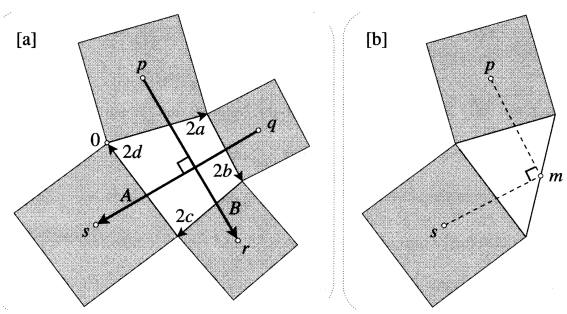

Prove that the line-segments joining the centers of opposite squares are perpendicular and of equal length; see [b].

1.3 Complex sequences and series

1.3.1 Sequences of complex numbers

Definition 1.68. A sequence $(z_n)_{n\ge 0}$ of complex numbers is called a *null sequence* iff

$$\forall \epsilon > 0, \exists N \in \mathbb{N} \text{ s.t. } \forall n > N,\ |z_n| < \epsilon. \tag{1.21}$$

Definition 1.69. A sequence $(z_n)_{n\ge 0}$ of complex numbers *converge*s to the complex number z iff the sequence of differences $(z_n - z)_{n\ge 0}$ is a null sequence.

Lemma 1.70. Let (z_n) be a sequence of complex numbers and z another complex number. The following statements are equivalent:

- $\lim_{n\to\infty} z_n = z$,
- $\lim_{n\to\infty} \operatorname{Re} z_n = \operatorname{Re} z$; $\lim_{n\to\infty} \operatorname{Im} z_n = \operatorname{Im} z$.

Lemma 1.71. Suppose two complex sequences converge: $\lim_{n\to\infty} z_n = z$ and $\lim_{n\to\infty} w_n = w$. Then we have

(1) $\lim_{n\to\infty} z_n \pm w_n = z \pm w$,

(2) $\lim_{n\to\infty} z_n \cdot w_n = z \cdot w$,

(3) $\lim_{n\to\infty} |z_n| = |z|$,

(4) $\lim_{n\to\infty} \overline{z_n} = \overline{z}$,

(5) $z \neq 0$, $z_n \neq 0 \Rightarrow \lim_{n\to\infty} z_n^{-1} = z^{-1}$.

1.3.2 Complex power series

Definition 1.72. A complex series $(\sum_{i=0}^n z_i)_{n\ge 0}$ is *absolutely convergent* if the series $(\sum_{i=0}^n |z_i|)_{n\ge 0}$ converges.

Definition 1.73. A *complex power series* (with center zero) is a series of the form

$$p(z) = \sum_{n=0}^{\infty} a_n z^n, \tag{1.22}$$

where the coefficients $a_j \in \mathbb{C}$ are given.

Definition 1.74. A series $\sum_{n=0}^{\infty} f_n(x)$ of functions $f_n : \mathcal{D} \to \mathbb{C}, \mathcal{D} \subset \mathbb{C}$ is said to *converge normally* on $\mathcal{D}$ iff for each $a \in \mathcal{D}$ there exist an open ball $\mathcal{U}_\epsilon(a)$ and a sequence of positive constants $\{M_n\}$ such that

- $\forall x \in \mathcal{D} \cap \mathcal{U}_\epsilon(a)$, $\forall n \in \mathbb{N}$, $|f_n(x)| \le M_n$,
- the series $\sum_{n=0}^{\infty} M_n$ converges.

Theorem 1.75 (Weierstrass M-test)**.** Normal convergence implies absolute and locally uniform convergence.

Proof. Let $S_n = \sum_{j=1}^n f_j(x)$. By normal convergence of S_∞ and the Cauchy criterion (Lemma B.43), we have

$$\forall a \in \mathcal{D}, \exists \epsilon > 0 \text{ s.t. } \mathcal{U}_\epsilon(a) \subset \mathcal{D}, \quad \text{and } \exists (M_n), \exists N \in \mathbb{N}, \text{ s.t.}$$

$$\forall n > N, \forall x \in \mathcal{U}_\epsilon(a), |S_n(x) - S_N(x)| \le \sum_{j=N+1}^{n} M_j,$$

which shows the local uniform convergence of $(S_n(x))$ since $\lim_{N\to\infty} \sum_{j=N+1}^n M_j = 0$.

The absolute convergence follows directly from Definition B.46, the two conditions of normal convergence in Definition 1.74, and the comparison test (Theorem B.44). □

Corollary 1.76. A normally convergent series of functions can be arbitrarily re-ordered without changing its convergence or its limit.

Proof. This follows from absolute convergence. □

Theorem 1.77 (Abel 1826)**.** For each power series (1.22), there exists a number r uniquely determined from a_j

$$r = \sup\{t \ge 0 : (a_n t^n) \text{ is a bounded sequence}\} \tag{1.23}$$

such that

(a) the series (1.22) converges normally in the open disk $\mathcal{U}_r(0)$,

(b) the series (1.22) diverges in the open set $|z| > r$ for each $z \in \mathbb{C}$.

Proof. Conclusion (b) follows directly from the definition of r as a supremum in (1.23). If $r = 0$, conclusion (a) holds vacuously. For $r > 0$, it suffices to show that $\forall \rho \in (0, r)$, the series (1.22) satisfies the two conditions in Definition 1.74. Choose $\rho_1 \in (\rho, r)$ and we know from (1.23) that

$$\exists M \in \mathbb{R}^+ \text{ s.t. } \forall n \in \mathbb{N},\ |a_n \rho_1^n| < |a_n r^n| < M < +\infty.$$

It follows that

$$\forall n \in \mathbb{N}, \forall z \in \mathcal{U}_\rho(0), \qquad |a_n z^n| = \left| a_n \rho_1^n \frac{z^n}{\rho_1^n} \right| \le M \frac{\rho^n}{\rho_1^n}.$$

Hence the first condition in Definition 1.74 holds by setting $M_n = M \frac{\rho^n}{\rho_1^n}$. The second condition follows from the convergence of the geometric series $\sum M_n$. □

Definition 1.78. For the power series (1.22), the number r in (1.23) and the open disk $\mathcal{U}_r(0)$ are respectively called its *convergence radius* and its *convergence disk*.

Theorem 1.79. If the power series (1.22) satisfies $a_n \neq 0$ for all $n \in \mathbb{N}$, then its convergence radius r is determined by

$$\frac{1}{r} = L := \limsup_{n\to\infty} \left| \frac{a_{n+1}}{a_n} \right|, \tag{1.24}$$

where $L \in [0, +\infty]$ and we adopt the convention that $\frac{1}{0} = +\infty$ and $\frac{1}{\infty} = 0$.

Proof. As a property of limit superior, the existence of $\lim_{n\to\infty} v_n$ implies

$$\limsup_{n\to\infty}(u_n v_n) = (\limsup_{n\to\infty} u_n)\,(\lim_{n\to\infty} v_n)\,. \tag{1.25}$$

The rest of the proof follows from applying the ratio test to the power series (1.22). □

Example 1.80. For $\sum_{n=1}^{\infty} \cos(n\mathbf{i})(z-1)^n$, its radius of convergence is e^{-1}.

Theorem 1.81 (Cauchy-Hadamard)**.** The radius of convergence r of the power series (1.22) is given by

$$\frac{1}{r} = L := \limsup_{n\to\infty} |a_n|^{\frac{1}{n}}. \tag{1.26}$$

Proof. If the power series (1.22) converges for $|z| = \rho$, we have

$$\limsup_{n\to\infty} |a_n z^n|^{\frac{1}{n}} = \rho L.$$

The root test then completes the proof. □

1.4 Fundamental complex functions

Notation 1. $\mathbb{C}^\bullet := \mathbb{C} \setminus \{0\}$.

1.4.1 The exponential function

Definition 1.82. The *exponential function* $\exp : \mathbb{C} \to \mathbb{C}$ is defined as the power series

$$e^z = \exp(z) := \sum_{n=0}^{\infty} \frac{z^n}{n!}. \tag{1.27}$$

Definition 1.83. The *Euler's number*, or the *number e*, is $e := \exp(1)$.

Example 1.84. There are three common ways to visualize complex functions. In the first type, a z-plane (or $x - y$-plane) that includes the domain of f is drawn separately from a w-plane (or $u - v$-plane) that includes the range of f. Simple subsets of $\mathbb{C}$ are drawn on the z-plane with their corresponding images under f drawn on the w-plane.

Example 1.85. The following dual-plane plots visualize the transformative actions of $z \mapsto \exp(z)$.

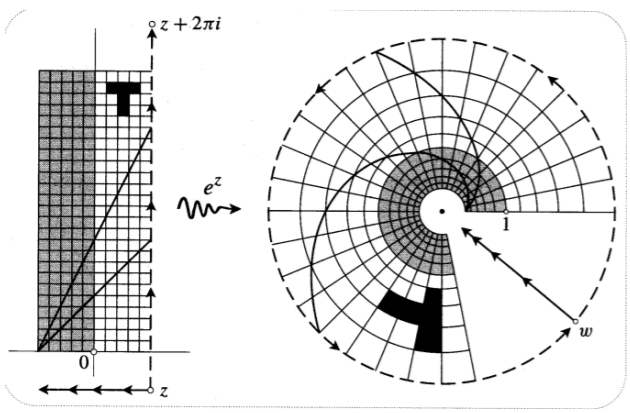

Lemma 1.86 (Cauchy multiplication theorem)**.** Two absolutely convergent series $\sum_{n=0}^{\infty} a_n$ and $\sum_{n=0}^{\infty} b_n$ satisfy

$$\sum_{n=0}^{\infty} \sum_{k=0}^{n} a_k b_{n-k} = \left(\sum_{n=0}^{\infty} a_n \right) \cdot \left(\sum_{n=0}^{\infty} b_n \right). \tag{1.28}$$

Proof. From the following table,

	b_0	b_1	$\dots$	b_m
a_0	$a_0 b_0$	$a_0 b_1$	$\dots$	$a_0 b_m$
a_1	$a_1 b_0$	$a_1 b_1$	$\dots$	$a_1 b_m$
$\vdots$	$\dots$	$\dots$	$\dots$	$\dots$
a_m	$a_m b_0$	$a_m b_1$	$\dots$	$a_m b_m$

we define

$$A_m = \sum_{n=0}^{m} a_n, \qquad B_m = \sum_{n=0}^{m} b_n, \tag{1.29}$$

$$c_n = \sum_{k=0}^{n} a_k b_{n-k}, \qquad C_m = \sum_{n=0}^{m} c_n. \tag{1.30}$$

Clearly, $A_m B_m$ is the sum of all entries in the table, c_n is the sum of entries on an antidiagonal, and C_m that for

all antidiagonals $n \le m$. Since $\sum_{n=0}^{\infty} a_n$ and $\sum_{n=0}^{\infty} b_n$ are absolutely convergent, we have

$$\sum_{n=0}^{\infty} |a_n| = A < \infty, \qquad \sum_{n=0}^{\infty} |b_n| = B < +\infty,$$
$$\left(\sum_{n=0}^{\infty} |a_n|\right)\left(\sum_{n=0}^{\infty} |b_n|\right) = AB < \infty.$$

By Theorem B.14, the sequence of partial sums $(\sum_{n=0}^{m} d_n)_m$ with $d_n = \sum_{k=0}^{n} |a_k||b_{n-k}|$ converges because it is monotone and bounded above by AB. Hence $\lim_{m\to\infty} \sum_{n=m+1}^{\infty} d_n = 0$. It follows that

$$\lim_{m\to\infty} |A_m B_m - C_m| \le \lim_{m\to\infty} \sum_{n=m+1}^{\infty} |d_n| = 0,$$

which yields (1.28). □

Theorem 1.87 (Cauchy's product formula)**.** If the convergence radius for both series $A = \sum_{n=0}^{\infty} a_n z^n$ and $B = \sum_{n=0}^{\infty} b_n z^n$ is at least $R > 0$, then we have

$$\forall z \in \mathcal{U}_R(0), \quad \left(\sum_{n=0}^{\infty} a_n z^n\right) \cdot \left(\sum_{n=0}^{\infty} b_n z^n\right) = \sum_{n=0}^{\infty} c_n z^n, \tag{1.31}$$

where $c_n := \sum_{k=0}^{n} a_k b_{n-k}$.

Proof. For $|z| < R$, both A and B are normally convergent, hence absolute convergent by Theorem 1.75. Then the Cauchy multiplication theorem (Lemma 1.86) completes the proof. □

Theorem 1.88. $\forall z, w \in \mathbb{C}$, $\exp(z + w) = \exp(z) \cdot \exp(w)$.

Proof. This follows from Lemma 1.86, (1.27), and the binomial theorem. □

Corollary 1.89. $\forall z \in \mathbb{C}$, $\exp(z) \ne 0$.

Proof. This follows from Theorem 1.88 with $w = -z$. □

Lemma 1.90. The exponential function satisfies

(EXP-1) The restriction of exp to $\mathbb{R}$ is a monotonically increasing positive function with $\lim_{x\to-\infty} e^x = 0$ and $\lim_{x\to+\infty} e^x = +\infty$.

(EXP-2) There exists a positive number π such that $e^{\frac{\pi}{2}\mathbf{i}} = \mathbf{i}$ and such that $e^z = 1$ if and only if $\frac{z}{2\pi\mathbf{i}} \in \mathbb{Z}$.

(EXP-3) exp is a periodic function with period $2\pi\mathbf{i}$.

(EXP-4) The mapping $\theta \mapsto e^{\mathbf{i}\theta}$ maps $\mathbb{R}$ onto the unit circle.

(EXP-5) $w \in \mathbb{C}^\bullet$ implies $w = e^z$ for some $z \in \mathbb{C}$.

Exercise 1.91. Prove Lemma 1.90.
Hint: define $\cos(\theta) := \mathrm{Re}\,(e^\theta)$, $\sin(\theta) := \mathrm{Im}\,(e^\theta)$, and look for the zeros of these functions.

1.4.2 Trignometric functions

Definition 1.92. The *complex sine* and *complex cosine* are defined as the complex series

$$\sin(z) := \sum_{n=0}^{\infty} \frac{(-1)^n}{(2n+1)!} z^{2n+1}, \tag{1.32}$$
$$\cos(z) := \sum_{n=0}^{\infty} \frac{(-1)^n}{(2n)!} z^{2n}. \tag{1.33}$$

Corollary 1.93. $\forall z \in \mathbb{C}$, we have

$$\exp(\mathbf{i}z) = \cos z + \mathbf{i}\sin z, \tag{1.34}$$
$$\cos(z) = \frac{\exp(\mathbf{i}z) + \exp(-\mathbf{i}z)}{2}, \tag{1.35}$$
$$\sin(z) = \frac{\exp(\mathbf{i}z) - \exp(-\mathbf{i}z)}{2\mathbf{i}}. \tag{1.36}$$

Proof. These follow from Definitions 1.82 and 1.92. □

Corollary 1.94. $\forall z \in \mathbb{C}$ and $\forall k \in \mathbb{Z}$, we have

$$\sin z = 0 \Leftrightarrow z = k\pi, \tag{1.37a}$$
$$\cos z = 0 \Leftrightarrow z = k\pi + \frac{\pi}{2}. \tag{1.37b}$$

1.4.3 Euler's formula

Corollary 1.95 (Euler's formula)**.**

$$\forall \theta \in \mathbb{R}, \quad \exp(\mathbf{i}\theta) = \cos\theta + \mathbf{i}\sin\theta. \tag{1.38}$$

Corollary 1.96. $\forall z = x + \mathbf{i}y$, $e^z = e^x(\cos y + \mathbf{i}\sin y)$.

Corollary 1.97. $\forall z, w \in \mathbb{R}$, we have

$$\cos(z + w) = \cos z \cos w - \sin z \sin w, \tag{1.39}$$
$$\sin(z + w) = \sin z \cos w + \cos z \sin w. \tag{1.40}$$

Proof. We have

$$\begin{aligned} & \cos(\theta + \phi) + \mathbf{i}\sin(\theta + \phi) = e^{\mathbf{i}(\theta+\phi)} = e^{\mathbf{i}\theta} e^{\mathbf{i}\phi} \\ = \; & (\cos\theta + \mathbf{i}\sin\theta)(\cos\phi + \mathbf{i}\sin\phi) \\ = \; & (\cos\theta\cos\phi - \sin\theta\sin\phi) + \mathbf{i}(\sin\theta\cos\phi + \cos\theta\sin\phi), \end{aligned}$$

where the first and the third step follow from Euler's formula, the second from Theorem 1.88, and the fourth step from Definition 1.52. The proof is completed by the fact that the equality of two complex numbers implies the equality of both the real parts and the imaginary parts. □

Exercise 1.98. Prove $\cos(3\theta) = C^3 - 3CS^2$ and $\sin(3\theta) = 3SC^2 - S^3$, where $C = \cos\theta$ and $S = \sin\theta$.

Exercise 1.99. Prove $\tan(3\theta) = \frac{3T - T^3}{1 - 3T^2}$ where $T = \tan\theta$.

1.4.4 Hyperbolic sine and cosine

Definition 1.100. The complex functions of *hyperbolic sine* and *hyperbolic cosine* are defined as

$$\cosh(z) := \frac{\exp(z) + \exp(-z)}{2}, \tag{1.41}$$

$$\sinh(z) := \frac{\exp(z) - \exp(-z)}{2}. \tag{1.42}$$

Corollary 1.101. Hyperbolic sine and hyperbolic cosine functions have period $2\pi\mathbf{i}$ and satisfy

$$\cosh(z+w) = \cosh z \cosh w + \sinh z \sinh w, \tag{1.43}$$

$$\sinh(z+w) = \sinh z \cosh w + \cosh z \sinh w, \tag{1.44}$$

$$\cosh z = \cos(\mathbf{i}z), \qquad \sinh z = -\mathbf{i}\sin(\mathbf{i}z), \tag{1.45}$$

$$\cos z = \cosh(\mathbf{i}z), \qquad \sin z = -\mathbf{i}\sinh(\mathbf{i}z), \tag{1.46}$$

$$\cosh^2 z - \sinh^2 z = 1. \tag{1.47}$$

Definition 1.102. A *surface patch* is (the image of) a continuous map $\sigma : (0,1)^2 \to \mathbb{R}^3$.

Example 1.103. The second way to visualize a complex function $f(z)$ is to plot the *modular surface*, or *analytic mountainscape* or *analytic landscape*, where the argument of $f(z)$ is discarded and $|f(z)|$ is plotted against each point z to obtain a surface patch $z \mapsto (z, |f(z)|)$. Two examples are as follows. These mountains have no peaks, only valley bottoms that reach down to the complex plane. So it is not fun to climb these mountains!

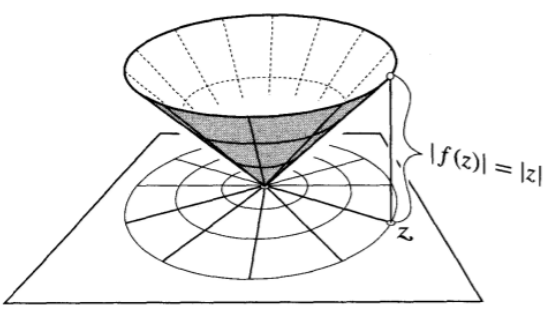

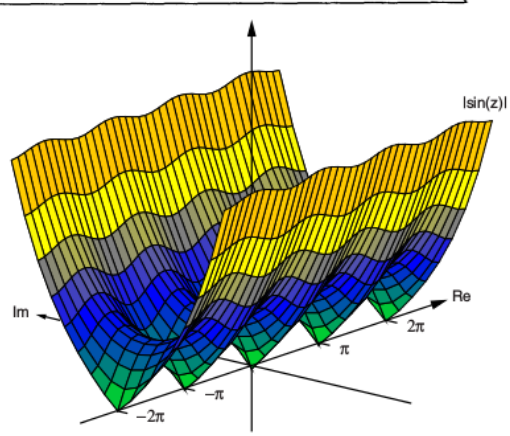

Example 1.104. Corollary 1.101 unites sine, cosine, hyperbolic sine and cosine functions. As illustrated in the following figure, taking different cross sections of the modular surface of $f(z) = \sin(z)$ yields these different functions.

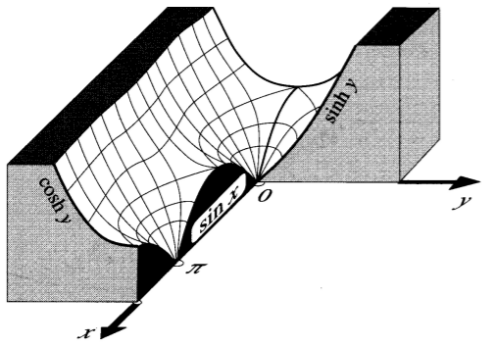

Exercise 1.105. What are the shapes of images of straight lines $x =$const and $y =$const under $z = x + \mathbf{i}y \mapsto \cos(z)$? Draw a dual-plane plot similar to that in Example 1.85 to answer this question. (Hint: use Corollary 1.101)

1.4.5 The natural logarithm

Theorem 1.106. The following map is surjective but not injective,

$$(r, \varphi) \mapsto r(\cos\varphi + \mathbf{i}\sin\varphi) : \mathbb{R}^+ \times \mathbb{R} \to \mathbb{C}^\bullet. \tag{1.48}$$

Definition 1.107. In the *polar coordinate representation* of $z \in \mathbb{C}^\bullet$,

$$z = |z|(\cos\varphi + \mathbf{i}\sin\varphi), \tag{1.49}$$

each $\varphi \in \mathbb{R}$ is called an *argument* of z. The unique argument within the interval $(-\pi, \pi]$ is called the *principal value of the argument* of z and denoted by $\mathrm{Arg}(z)$.

Theorem 1.108 (Addition theorem for circular functions)**.**

$$(\cos\varphi + \mathbf{i}\sin\varphi)(\cos\phi + \mathbf{i}\sin\phi) = \cos(\varphi+\phi) + \mathbf{i}\sin(\varphi+\phi).$$

Theorem 1.109. The *principal branch of the logarithm* $\mathrm{Log} : \mathbb{C}^\bullet \to \mathbb{C}$ is uniquely determined by

- $\exp(\mathrm{Log} z) = z$,
- $\forall z \neq 0$, $\mathrm{Im}\,\mathrm{Log} z \in (-\pi, \pi]$.

Theorem 1.110. $\forall z \in \mathbb{C}^\bullet$, $\mathrm{Log} z = \log|z| + \mathbf{i}\mathrm{Arg} z$.

Proof. This follows directly from Definition 1.107 and Theorem 1.109. □

Example 1.111. As negative consequences for forcing the logarithm to be single-valued, a discontinuity shows up at the boundary of $(-\pi, \pi]$ and familiar rules for real numbers may not hold any more, e.g.

$$\exists a, b \in \mathbb{C} \text{ s.t. } \mathrm{Log}(ab) \neq \mathrm{Log}(a) + \mathrm{Log}(b).$$

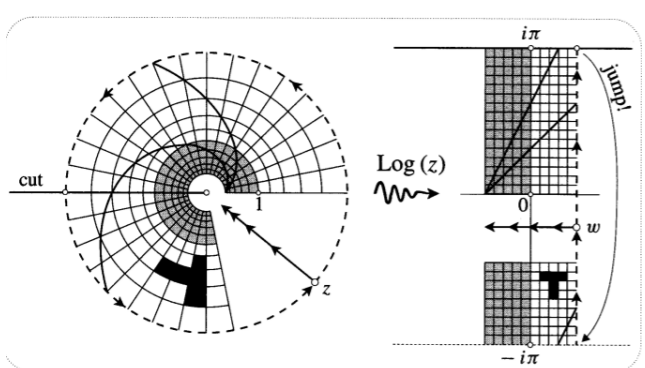

Example 1.112. The principal value of a^b for $a, b \in \mathbb{C}$ can be defined as the element with $k = 0$ in the following set

$$\{a^b\} := \{\exp(b \operatorname{Log} a) \exp(2\pi \mathbf{i} bk) : k \in \mathbb{Z}\}.$$

1.4.6 The power function

Definition 1.113. The *integer power of a complex number* z is

$$z^n = \begin{cases} n \text{ copies of } z \text{ multiplied} & \text{if } n \in \mathbb{Z}^+; \\ 1 & \text{if } n = 0; \\ \left(z^{-1}\right)^{-n} & \text{otherwise.} \end{cases} \tag{1.50}$$

Theorem 1.114. For each $n \in \mathbb{N}^+$ there exist exactly n different nth roots of unity, namely

$$\zeta_k := \cos \frac{2k\pi}{n} + \mathbf{i} \sin \frac{2k\pi}{n}, \quad 0 \le k < n, \tag{1.51}$$

each of which satisfies the *cyclotomic equation* $z^n = 1$.

Definition 1.115. The *complex power function* is

$$z^w = \exp(w \log z). \tag{1.52}$$

Exercise 1.116. Calculate $\mathbf{i}^{\mathbf{i}}$.

Exercise 1.117. We have been augmenting sets of numbers: $\mathbb{N} \subset \mathbb{Z} \subset \mathbb{Q} \subset \mathbb{R} \subset \mathbb{C}$. For $n \in \mathbb{Z}$ and $x, z \in \mathbb{X}$ where $\mathbb{X}$ is a set in the first column, is $\mathbb{X}$ closed under the operations in the first row?

	$+/-$	$\times/\div$	$\cdot^n$	$\sqrt[n]{\cdot}$	e^x	z^x
$\mathbb{N}$						
$\mathbb{Z}$						
$\mathbb{Q}$						
$\mathbb{R}$						
$\mathbb{C}$						

Use the above table to tell a story of marching from $\mathbb{N}$ to $\mathbb{C}$.

1.5 The isomorphism of $\mathbb{C}$ to a family of $\mathbb{R}^{2\times 2}$ normal matrices

Lemma 1.118. Define

$$\mathbb{R}_N^{2\times 2} = \left\{ \begin{bmatrix} \alpha & -\beta \\ \beta & \alpha \end{bmatrix} : \ \alpha, \beta \in \mathbb{R};\ \alpha^2 + \beta^2 \neq 0 \right\}. \tag{1.53}$$

Then the following algebra is an Abelian group,

$$\mathbf{M} = \left(\mathbb{R}_N^{2\times 2}, *, ^{-1}, I\right), \tag{1.54}$$

where $*$ denotes matrix multiplication, $^{-1}$ matrix inverse, and I the 2-by-2 identity matrix.

Proof. It is straightforward to verify the conditions in Definition G.6, e.g., the invertibility holds because

$$\begin{bmatrix} \alpha & -\beta \\ \beta & \alpha \end{bmatrix}^{-1} = \frac{1}{\alpha^2 + \beta^2} \begin{bmatrix} \alpha & \beta \\ -\beta & \alpha \end{bmatrix}. \qquad \square$$

Theorem 1.119 (The isomorphism of complex multiplication and normal operators)**.** Define an Abelian group

$$\mathbf{C}_m = \left(\mathbb{C}^\bullet, *, ^{-1}, 1\right), \tag{1.55}$$

where $*$ denotes complex multiplication, $^{-1}$ the inverse of a complex number, and 1 the multiplication identity of $\mathbb{C}^\bullet$. Then $\mathbf{C}_m$ is isomorphic to (1.54) with the isomorphism as

$$h(\alpha + \mathbf{i}\beta) = \begin{bmatrix} \alpha & -\beta \\ \beta & \alpha \end{bmatrix} \tag{1.56}$$

Proof. We verify that (1.56) is a homomorphism by

$$\begin{aligned} h\big((x + \mathbf{i}y)(u + \mathbf{i}v)\big) &= h\big((xu - yv) + \mathbf{i}(xv + yu)\big) \\ &= \begin{bmatrix} x & -y \\ y & x \end{bmatrix} \cdot \begin{bmatrix} u & -v \\ v & u \end{bmatrix} \\ &= h(x + \mathbf{i}y) h(u + \mathbf{i}v). \end{aligned}$$

Then the proof is completed by Lemma 1.118 and the bijectiveness of (1.56). $\square$

Lemma 1.120. For an $\mathbb{R}$-linear map $A : \mathbb{C} \to \mathbb{C}$, the following statements are equivalent:

(a) $\exists \ell \in \mathbb{C}$ s.t. $\forall z \in \mathbb{C}$, $A(z) = \ell z$.

(b) A is $\mathbb{C}$-linear.

(c) $A(\mathbf{i}) = \mathbf{i}A(1)$.

(d) The matrix of A with respect to the canonical basis $1 = (1, 0)$ and $\mathbf{i} = (0, 1)$ has the special form

$$\begin{bmatrix} \alpha & -\beta \\ \beta & \alpha \end{bmatrix}, \qquad \alpha, \beta \in \mathbb{R}. \tag{1.57}$$

Exercise 1.121. Prove Lemma 1.120.