in the data. Specifically, the width affects the network's ability to capture a broader range of features, while the depth facilitates the learning of hierarchical representations. Nevertheless, studies indicated that a multilayer perceptron with a single hidden layer can approximate any continuous function [45], [46]. Multilayer perceptron is effective in various industries and applications from healthcare to finance [47]. However, a multilayer perceptron requires the input data to be structured in a one-dimensional format (e.g., tabular data), making it less suitable for unstructured data such as images, text, and speech. To leverage multilayer perceptron for unstructured data, a feature extraction or transformation into structured data is necessary.

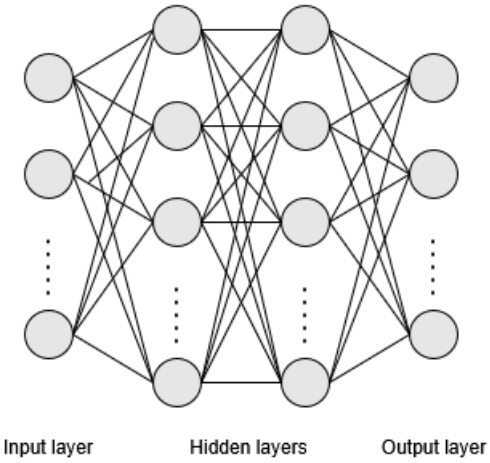

Figure 5: A fully connected neural network.

3.1.2. Recurrent Neural Network

Recurrent neural network (RNN) is a neural network model that leverages the sequential information and memory through the use of recurrent connections, allowing it to effectively process data such as time series, text, speech and other sequential patterns. As shown in Fig. 6, a recurrent neural network is characterized by the recurrent connection, which enables the network to loop back and use internal state from the previous time step to the next time step. The internal state is parameterized by a set of weights shared across the sequence of data. The training of recurrent neural networks suffers from the issue of vanishing gradient due to the challenges of propagation of gradients over a long sequence of data. Variants of recurrent neural networks are introduced to overcome the problem of vanishing gradient, such as long short-term memory (LSTM) [48] and gated recurrent memory (GRU) [49]. The improved recurrent neural networks introduce memory cell and gating mechanisms to retain and discard information in every time step, allowing for more effective learning dependencies in long sequence. The network architecture can be built using fully connected and convolutional layers [50].

LSTM is arguably the most widely used variant and has been applied in various applications such as image captioning, machine translation and sentiment analysis [51]. Similar to the standard RNNs, LSTMs process information steps by steps using a chain of repeating units. Each LSTM unit consists of several gates, namely the forget gate, input gate and output gate that control the flow of information from one time step to the next time step. Figure 7 illustrates how information flows through these gates. The key component of an LSTM unit is the cell, represented by the horizontal line running through the top of the block. This cell maintains the state at each time step and is updated by the gates. Specifically, at each time step, the forget gate determines which information to be retained or discarded from the cell state based on the current input and the previous hidden state. The input gate decides what new information should be added to the cell state, while the output gate uses the updated cell state, current input and previous hidden state to produce the hidden state for the current time step.

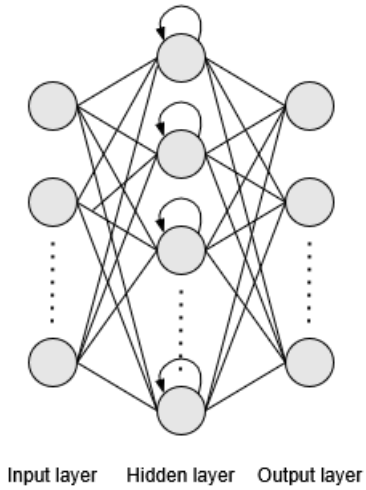

Figure 6: A neural network with recurrent connection.

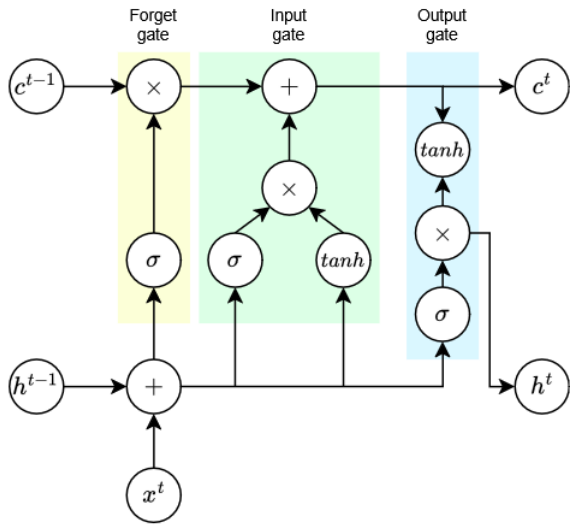

Figure 7: The architecture of an LSTM unit.

GRU is a popular variant of RNN that is similar to LSTM but has a relatively simpler architecture. The network has two gates called reset and update to control the information flow. Unlike

LSTM, GRU does not maintain a separate internal cell state, but uses the reset gate to determine which parts of the information to be retained and discarded, and the update gate to control how much of the previous hidden state should be passed to the current hidden state. Figure 8 illustrates the interconnection of the gates in a GRU unit.

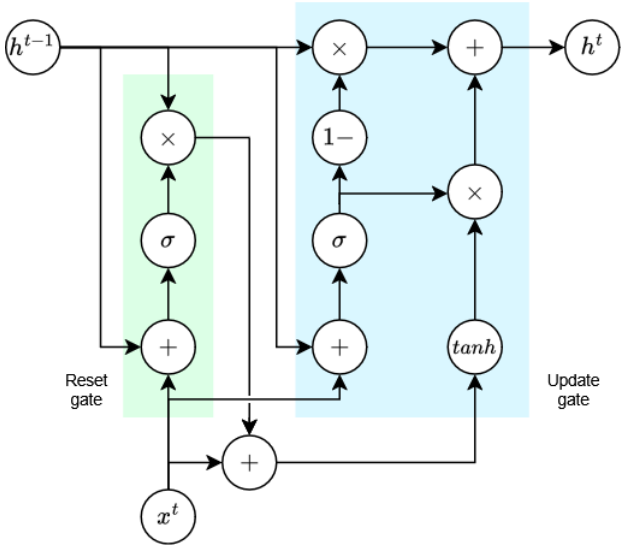

Figure 8: The architecture of an LSTM unit.

3.1.3. Convolutional Neural Network

Convolutional neural network (CNN) is a neural network model that preserves and leverages the spatial local information in the data through the use of convolutional layers. Fig. 9 shows a typical architecture of a convolutional neural network which consists of convolutional, pooling and fully connected layers. The convolutional and pooling layers are stacked alternately to automatically extract salient features in a hierarchical manner. The extracted features are then fed to fully connected layers to predict the outputs. The final feature maps need to be converted to a one-dimensional vector before they are fed to the fully connected layers. The conversion can be performed by flattening the feature maps. CNN architecture is crucial in increasing the performance of the prediction, as it is designed to efficiently extract the feature representation of the input data, enabling more accurate and robust pattern recognition. Over the last decade, several CNN architectures have been proposed, whereby the focus of the improvements has been on enhancing the feature learning capabilities and addressing challenges such as vanishing gradient and diminishing feature reuse.

AlexNet is among the first CNN models that gained widespread recognition and success, marking a significant achievement in the field of deep learning for computer vision tasks [52]. The model consists of five convolutional layers with maximum pooling operation performed after the first and second convolutional layers, followed by three fully connected layers. The first and second convolutional layers utilize a filter size of 11×11 and 5×5 respectively, and 3×3 filter size is used for the remaining convolutional layers. ReLU activation function is used to mitigate the vanishing gradient. AlexNet is the first deep learning architecture that demonstrated CNN's capability for large-scale image recognition. While 8 layers was considered deep for its time, later deep learning architectures demonstrated that even deeper networks could achieve better performance.

ZFNet is a classic CNN model which has a similar architectural principle as AlexNet, featuring five convolutional layers with maximum pooling layers after the first and second convolution, followed by three fully connected layers [53]. The significant differences are the use of smaller filter size and stride in the convolutional layers and contrast normalization of the feature maps, which allows the model to capture better features and improve the overall performance. This configuration improves feature extraction and performance compared to AlexNet. However, like AlexNet, its limited depth restricted its ability to learn more complex hierarchical features.

Network-in-network introduces two innovative concepts to enhance the performance of the model [54]. The first was introducing a block of convolutional layers consisting of $k \times k$ convolution followed by two 1×1 convolution operations. The pointwise convolutions are similar to applying a multilayer perceptron on the feature maps, allowing the model to approximate more abstract feature representations. In the preceding models, the final feature maps are vectorized by flattening operation for classification by the fully connected layers. Instead of flattening, network-in-network model calculates the spatial average of each feature map, and the resulting vector is fed to softmax function for classification. This approach is parameterless, significantly reducing the number of parameters. Although this approach makes it more computationally efficient, its general performance does not always surpass models with deeper architecture.

VGGNet attempts to improve the CNN architecture by adding more convolutional layers, specifically up to 19 layers to capture more intricate feature representation from input data, followed by three fully connected layers [55]. ReLU activation function is used to reduce vanishing gradient. Unlike AlexNet, all convolutional layers utilize a small fix filter size of 3×3 and maximum pooling layer is added after a stack of two or three convolutional layers. This configuration allows the model to extract more discriminative features and decreases the number of parameters. The architecture provides better generalization and finer feature extraction, but it comes at the cost of a large number of parameters (138 million), making it more computationally expensive for practical applications.

GoogleNet or Inception v1 leverages the fact that visual data can be represented at different scales by incorporating a module which consists of multiple convolutional pipelines with different filter sizes [56]. The module known as inception utilizes three kernel sizes (5×5, 3×3, 1×1) to capture spatial and channel information at different scales of resolution as shown in Fig. 10. This configuration enables a more effective feature extraction at both fine-grained and coarse-grained information from input data while maintaining computational efficiency. The model architecture utilizes the inception module at the higher layers, while the traditional convolution and maxi-

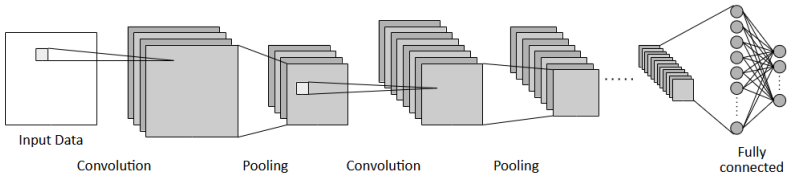

Figure 9: A neural network with convolutional and pooling layers followed by fully connected layers.

mum pooling block is used to extract primitive and basic features. The inception modules are stacked upon each other, with maximum pooling operation is performed occasionally to reduce the spatial resolution of the feature maps. GoogleNet utilizes global average pooling to vectorize the final feature maps before passing it to a fully connected layer for classification. However, the complexity of the model architecture may hinder its interpretability and tuning compared to simple models. GoogleNet has been further enhanced in later Inception models by introducing batch normalization, auxiliary classifier and deeper architecture.

Increasing the number of layers enhances the model performance, mainly for solving complex tasks. However, training a very deep neural network is challenging due to the vanishing gradient problem, where the gradients that are used to update the network become insignificant or extremely small as they are backpropagated from the output layer to the earlier layers. A model called Highway Network overcomes this issue by introducing a gating mechanism that regulates the information flow of the layers, enabling the flow of information from the earlier layers to the later layers [57]. Consequently, this not only mitigates the vanishing gradient problem, but also renders the gradient-based training more tractable, enabling the training of very deep neural networks consisting as many as 100 layers. However, the gating mechanism increases the model complexity, making the model mode resource-intensive and less suitable for real-time applications.

The gating mechanism of Highway Network increases the number of parameters for regulating the information flow. ResNet is a CNN architecture that incorporates residual (skip) connection that allows information to bypass certain layers, mitigating the vanishing gradient problem [58]. ResNet architecture stacks residual blocks, which consists of two or three of convolutional layers with batch normalization and ReLU, and a skip connection which adds the input to the output of the final convolutional layer as shown in Fig. 11. If the input dimension does not match with the residual output dimension, a linear projection is performed by the residual connection to match the dimensions. This concept of "feature reuse" is central to ResNet's design, as the skip connection allows the features learned in the previous layers to be directly reused in the layer layers, enhancing the model's ability to learn hierarchical features. In comparison to the gating mechanism of Highway Network, the residual connection is parameter-free, and thus does not incur additional computational costs. Furthermore, the connections are never closed whereby all information is always passed through the layers. This innovative concept enables the training of very deep neural networks boasting as many as 152 layers. However, as the model gets deeper, the effectiveness of skip connection diminishes and the performance gain is negligible. Furthermore, ResNet can be more complex to implement and fine-tune compared to simpler architecture.

DenseNet is another CNN architecture that overcomes the vanishing gradient problem. DenseNet follows the same approach as ResNet and Highway Network, utilizing skip connection to allow information flow from the earlier layers to later layers. However, DenseNet takes this concept one step further, by introducing a dense block consisting of multiple convolution functions (layers) with each convolution function performs batch normalization followed by ReLU and 3×3 convolution. Each convolutional layer in the dense block receives feature maps from all its preceding layers. Hence, the connection is referred to as a dense connection [59]. This configuration as shown in Fig. 12 maximizes information flow, feature reuse and preserves the feed-forward nature of the network, improving the feature learning. To reduce the computational costs, a block of 1×1 convolutional with batch normalization and maximum pooling layers known as transition block is used to reduce the spatial dimension of the feature maps. The model architecture integrates these dense and transition blocks, stacking them alternately. The network depth can reach up to 264 layers. However, Dense blocks can become computationally expensive due to the increasing number of feature maps. Furthermore, it is prone to overfitting due to the dense connection between the layers.

Although skip connections in ResNet effectively mitigate the vanishing gradient problem, a new challenge arises in the form of diminishing feature reuse as the network becomes deeper. Diminishing feature reuse refers to the diminishing effectiveness of the previously learned feature maps in subsequent layers, impacting the final prediction. WideResNet is a CNN architecture that is based on ResNet with the aim to mitigate diminishing feature reuse problem. Instead of making the network deeper, WideResNet makes the network wider by increasing the number of channels by k factor [60]. The increased width allows the model to capture more diverse features, enhancing its ability to learn complex relationships in the input data. This configuration improves feature learning efficiency while mitigating depth-related issues such as vanishing gradients and overfitting. However, wider models may increase memory usage and computational costs.

ResNeXt addresses the diminishing feature reuse by capturing more efficient and diverse features of the input data. ResNeXt introduces a concept of cardinality which is loosely

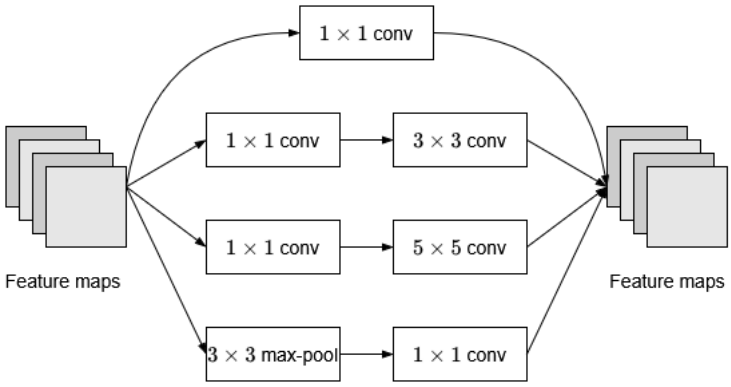

Figure 10: The inception module. Adapted from [56].

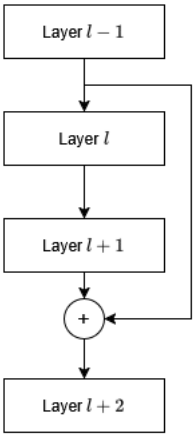

Figure 11: A residual connection which explicitly incorporates features from previous layers into the later layers. Adapted from [58].

based on the inception module as shown in Fig. 13. Cardinality refers to the number of independent and identical paths, where each path performs transformation of the input data, divided along the channel dimension [61]. In other words, instead of solely relying on increasing the depth of the model, ResNeXt enhances the feature learning by parallelizing the feature extraction through this cardinal path. In the proposed architecture, each path configuration is similar to the residual block of ResNet. The output from each path is then aggregated to form a comprehensive and diverse representation of the input data. The skip connection is used to mitigate the vanishing gradient problem. ResNeXt improves feature learning efficiency by balancing the depth and the width of the model, but its increased architectural complexity introduces additional parameters such as the number of cardinality, and increases memory usage and computational costs.

These CNN models were trained using the ImageNet [62] and/or CIFAR [63] datasets. ImageNet is considered as the most influential and important dataset in deep learning for computer vision research. The dataset was used to train all popular CNN models such as VGGNet, ResNet and DenseNet due to its large number of labeled images. The dataset contains 1.2 million training images, 50,000 validation images and 100,000 test images across 1000 object classes. CIFAR is a comparatively smaller dataset and includes two variants: CIFAR-10 and CIFAR-100. Both contain 50,000 training images and 10,000 test images, with CIFAR-10 covering 10 object classes and CIFAR-100 covering 100 classes.

Figures 14 and 15 show the top five classification error rates of the CNN models on ImageNet and CIFAR-10, respectively. Error rates for CIFAR-100 are not reported, as it was used only by Network-in-network, DenseNet, Wide ResNet and ResNeXt. It is also noted that the error rates on ImageNet are sourced from the models' published manuscripts, which may differ from the values reported on the ILSVRC website. As shown in the figures, error rates are generally similar between the datasets, despite their differences in complexity. This could be attributed to ImageNet's large number of training images, allowing the models to generalize well across its 1000 classes. Furthermore, it is evident that the newer models, such as ResNeXt, DenseNet, Inception-v4 and ResNet significantly outperform older models due to their more advanced architectures. Among the evaluated models, DenseNet achieved the best performance on CIFAR-10 with a 3.46% error rate, while Inception-v4 achieved the lowest error rate on ImageNet at 3.70%.

3.1.4. Applications of Deep Supervised Learning Models

The deep supervised learning models have become integral to advancements in various applications such as medical imaging, internet of things and robotics due to their ability to extract complex hierarchical features. Typically, the studies utilize transfer learning to build the predictive models for solving the problem at hand, especially in scenarios with limited labelled data. This approach leverages pre-trained models to accelerate model development and improve accuracy. In [64], VGGNet-16, Inception-v3 and ResNet-50 are employed as pre-trained models for breast cancer screening. Specifically, the weights of the convolutional layers are frozen, and the fully connected predicting layers are replaced with new ones. The models are then fine-tuned to adapt to the specific characteristics of the breast cancer dataset, improving their performance on the target task. In medical image segmentation, ResNet [65]

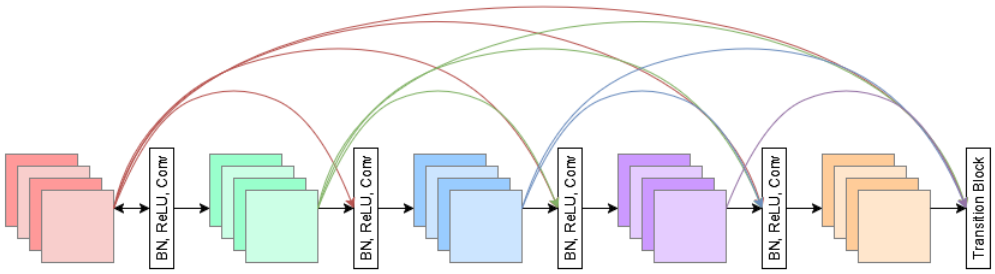

Figure 12: A 5-layer dense block. Adapted from [59]

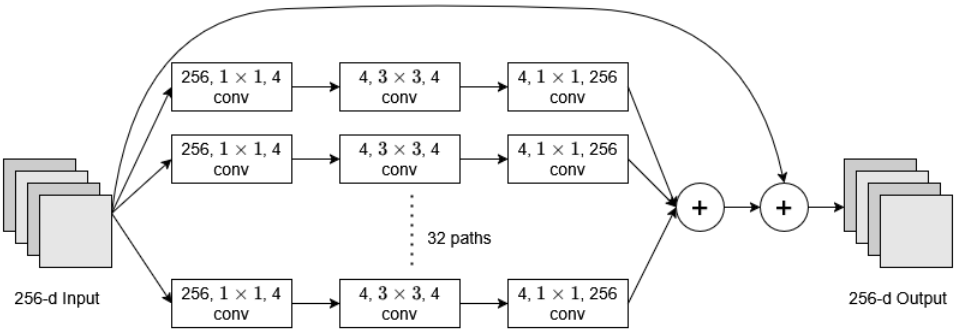

Figure 13: A cardinal block. Adapted from [61]

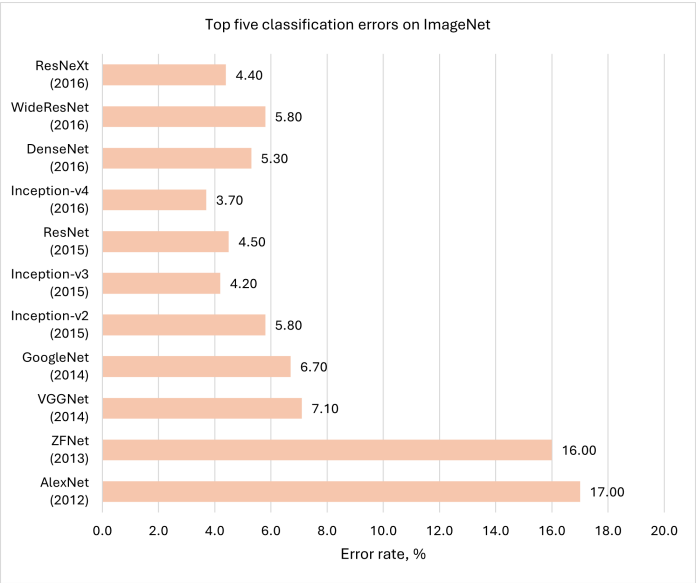

Figure 14: Top five classification errors on ImageNet.

and DenseNet [66] have been utilized to progressively capture rich spatial features from the input images, systematically reducing their dimensions while preserving essential information. These compressed feature representations are then gradually expanded and refined through upsampling operations, followed by localizing and predicting the segmentation regions.

In other studies, the architecture of the CNN models have been enhanced to improve their feature extraction capability. In [67], ResNet architecture is modified by replacing ReLU with LeakyReLU and incorporating self-attention before the predicting layers to assign weights based on the feature importance. In another study, the residual block of ResNet-18 is enhanced by integrating a channel attention before the skip connection addition [68]. Additionally, a channel attention featuring two parallel processing pipelines is introduced before the predicting layers. One pipeline applies maximum pooling while the other uses average pooling, allowing the model to capture diverse features. Each pooled output is then processed by con-