Breadboard [3b]

Entretoise de fixation [16]

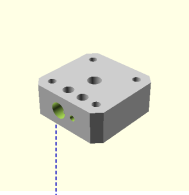

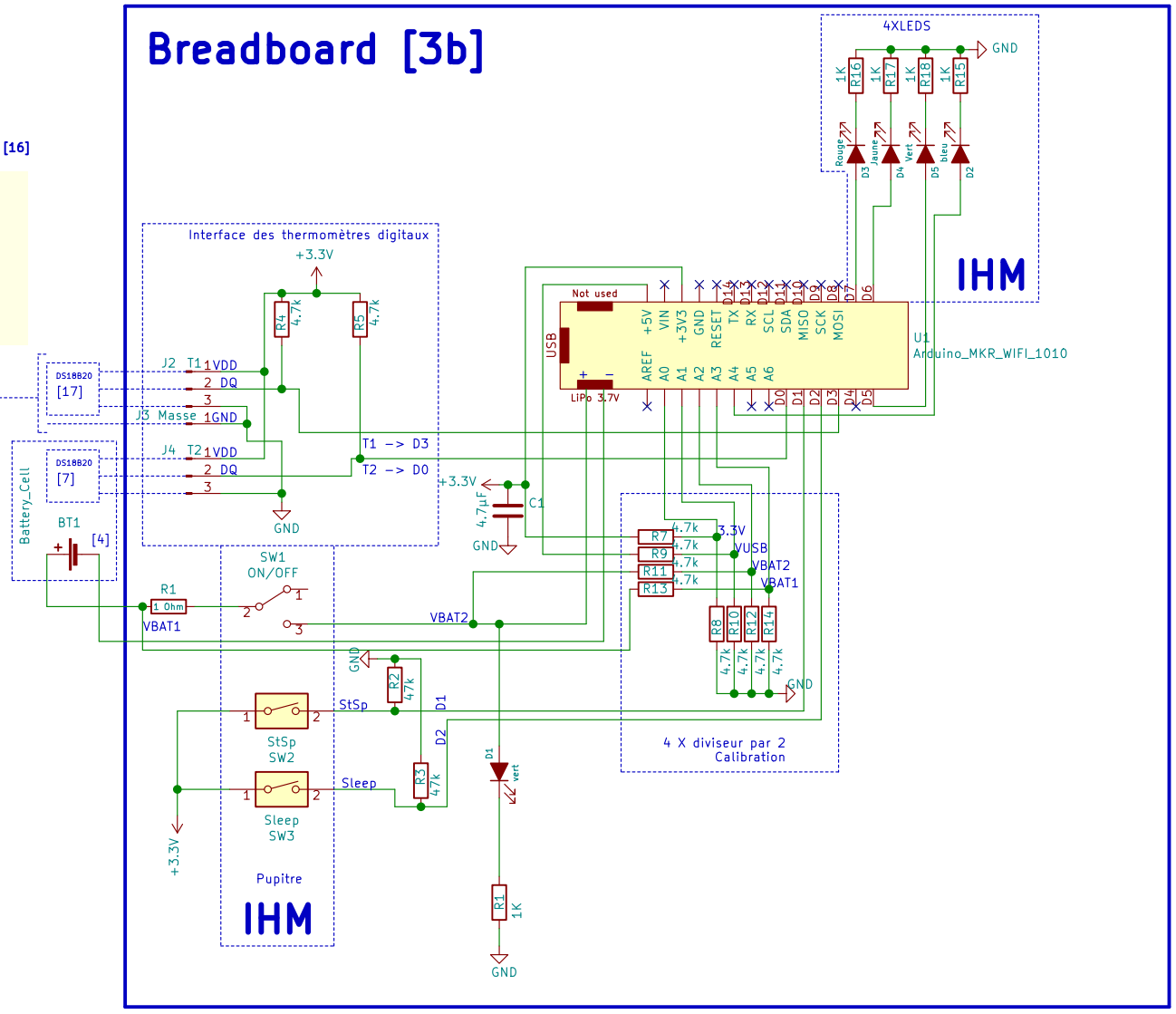

Quiet cook

Sheet: /

File: e-p-wifi.sch

Title: Plate-forme d'essais e-p-433-wifi

Size: A4	Date: 2019-05-27	**Rev: 1.0**
KiCad E.D.A. kicad 5.1.4-e60b26684ubuntu18.04.1		Id: 1/1