REVISIONS				
ZONE	REV	DESCRIPTION	DATE	APPROVED

ESP32 Module

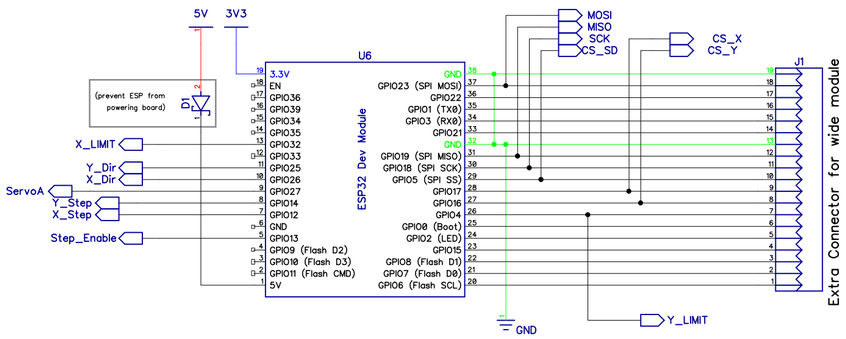

Inputs

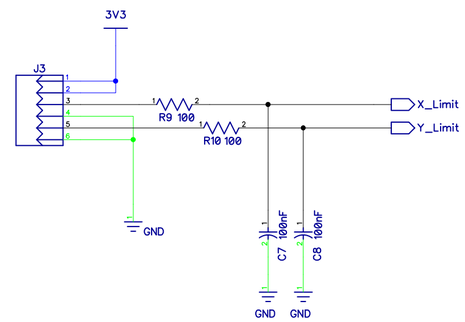

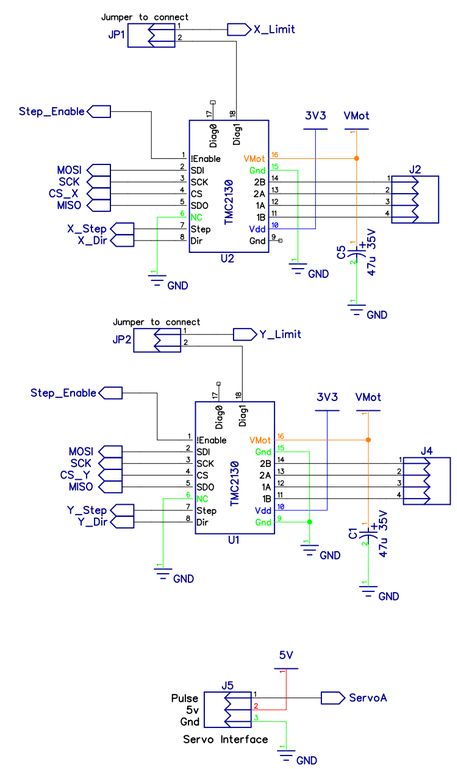

Stepper motor Drivers

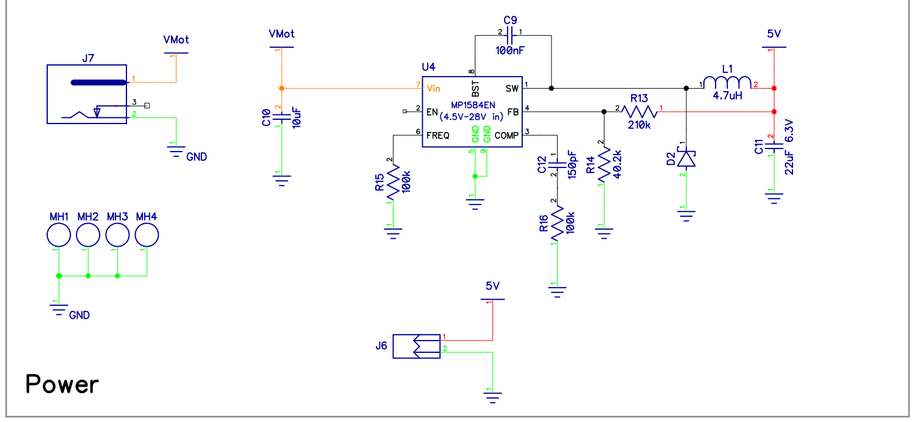

Power

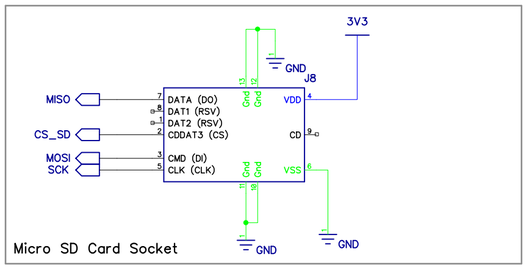

Micro SD Card Socket

Changes

V2

1. Moved X_Limit from GPIO 2 to 32
2. change drivers to diag footprint
3. Added jumpers to connect diag1 to limits
4. Grounded TMC2130 N/C pin for TMC5160 compatibility
5. Added 5V fan connector

	ESP32 Pen / Laser Controller			
	ESP32 Pen / Laser Controller			
Buildlog.net	SIZE	FSCM NO.	DWG NO.	REV 2.0
	SCALE		Sheet 1	