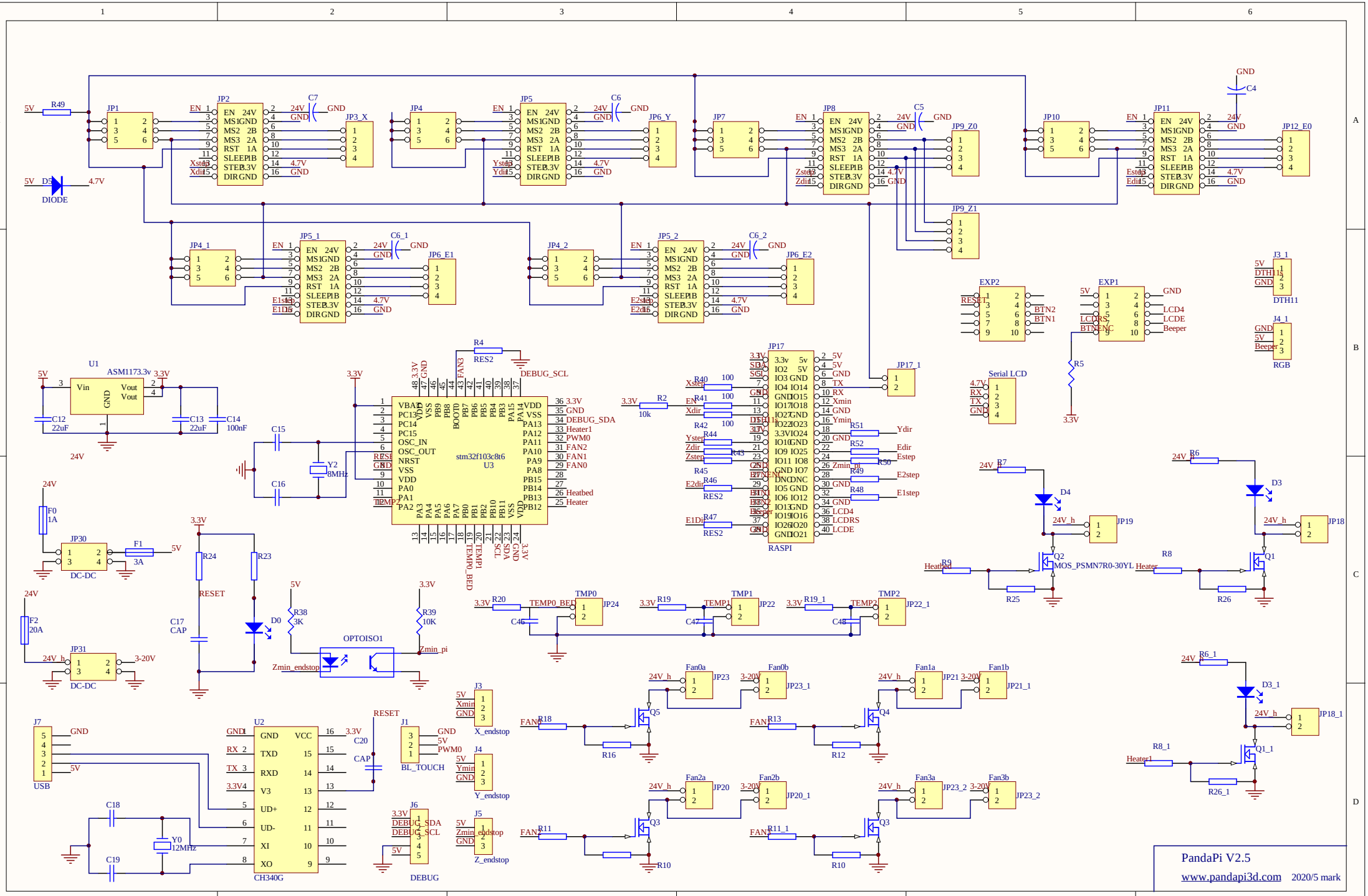
PandaPi V2.5
www.pandapi3d.com 2020/5 mark
stm32f103c8t6
U3
ASM1173.3v
U1
CH340G
U2
RASPI
DC-DC
DC-DC
USB
DEBUG
BL_TOUCH
DIODE
OPTOISO1
MOS_PSMN7R0-30YL
Serial LCD
DTH11
RGB
X_endstop
Y_endstop
Z_endstop
Zmin_endstop
Zmin_pi
Heater
Heatbed
Heater1
DEBUG_SCL
DEBUG_SDA
DEBUG_SCL
Ydir
Edir
Estep
E2step
E1step
Xstep
Ystep
Zstep
E2dir
E1dir
Xdir
Zdir
Xmin
Ymin
Zmin_pi
LCD4
LCDE
LCDRS
Beeper
BTN2
BTN1
RESET
TEMP0_BED
TEMP1
TEMP2
Fan0a
Fan0b
Fan1a
Fan1b
Fan2a
Fan2b
Fan3a
Fan3b
JP1
JP2
JP3_X
JP4
JP5
JP6_Y
JP7
JP8
JP9_Z0
JP9_Z1
JP10
JP11
JP12_E0
JP4_1
JP5_1
JP6_E1
JP4_2
JP5_2
JP6_E2
JP17
JP17_1
EXP2
EXP1
J3_1
J4_1
JP19
JP18
JP18_1
JP23
JP23_1
JP21
JP21_1
JP20
JP20_1
JP23_2
JP22
JP22_1
JP24
JP30
JP31
J7
J1
J3
J4
J5
J6
Q1
Q2
Q3
Q4
Q5
Q1_1
D3
D4
D3_1
D0
R49
R4
R2
R5
R7
R6
R6_1
R8
R8_1
R9
R25
R26
R26_1
R18
R16
R13
R12
R11
R10
R11_1
R38
R39
R24
R23
R20
R19
R19_1
C46
C47
C48
C7
C6
C5
C4
C6_1
C6_2
C12
C13
C14
C15
C16
C17
C18
C19
C20
Y0
Y2
F0
F1
F2
C17 CAP
C20 CAP