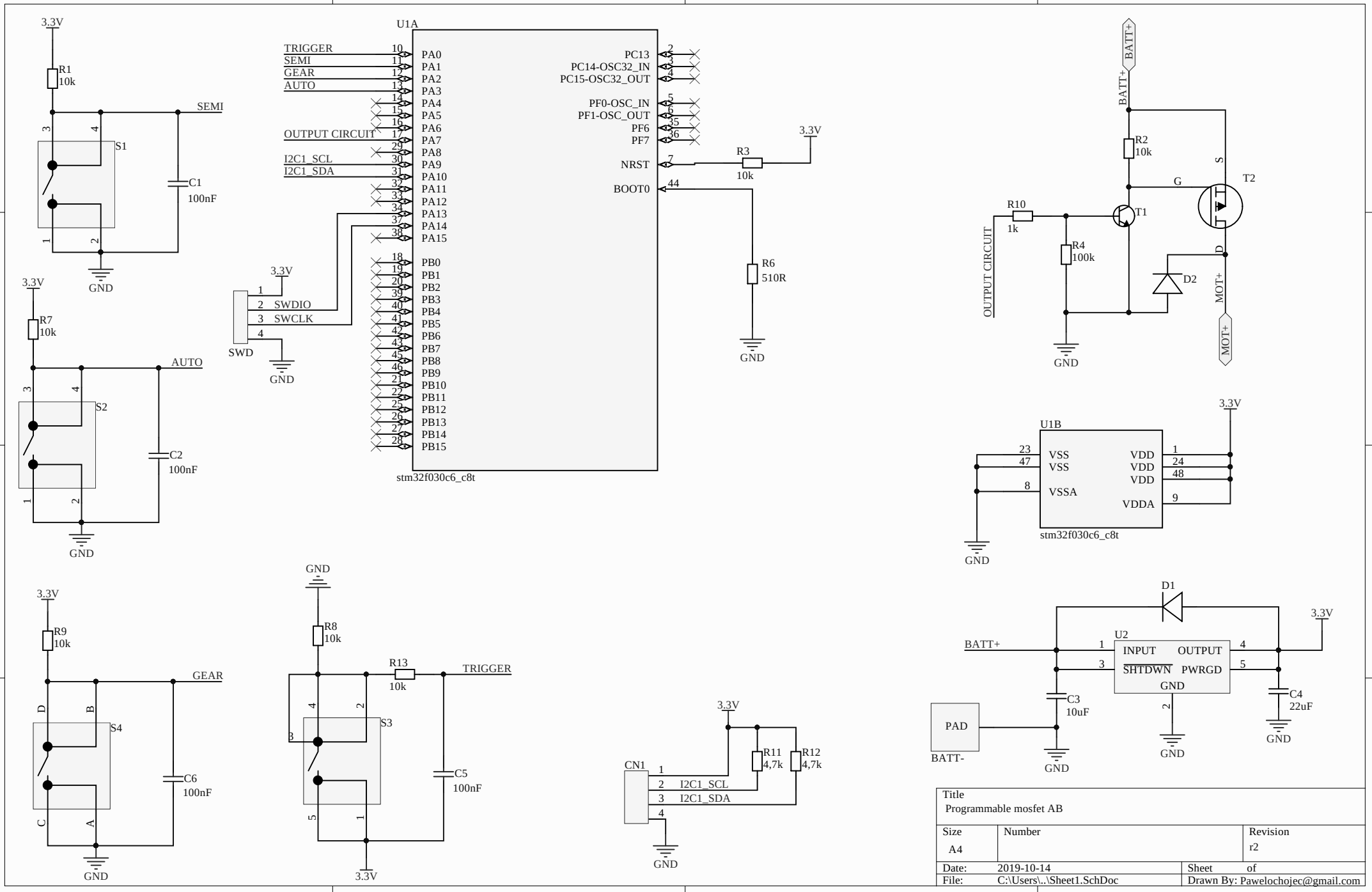
U1A
stm32f030c6_c8t
TRIGGER
SEMI
GEAR
AUTO
OUTPUT CIRCUIT
I2C1_SCL
I2C1_SDA
PA0
PA1
PA2
PA3
PA4
PA5
PA6
PA7
PA8
PA9
PA10
PA11
PA12
PA13
PA14
PA15
PB0
PB1
PB2
PB3
PB4
PB5
PB6
PB7
PB8
PB9
PB10
PB11
PB12
PB13
PB14
PB15
PC13
PC14-OSC32_IN
PC15-OSC32_OUT
PF0-OSC_IN
PF1-OSC_OUT
PF6
PF7
NRST
BOOT0
3.3V
R1 10k
R2 10k
R3 10k
R4 100k
R6 510R
R7 10k
R8 10k
R9 10k
R10 1k
R11 4,7k
R12 4,7k
R13 10k
C1 100nF
C2 100nF
C3 10uF
C4 22uF
C5 100nF
C6 100nF
S1
S2
S3
S4
SWD
SWDIO
SWCLK
GND
BATT+
MOT+
T1
T2
D1
D2
U1B
VSS
VSS
VSSA
VDD
VDD
VDD
VDDA
U2
INPUT
OUTPUT
SHTDWN
PWRGD
GND
PAD
BATT-
CN1
I2C1_SCL
I2C1_SDA
Title
Programmable mosfet AB
Size
A4
Number
Revision
r2
Date: 2019-10-14
Sheet of
File: C:\Users\..\Sheet1.SchDoc
Drawn By: Pawelochojec@gmail.com