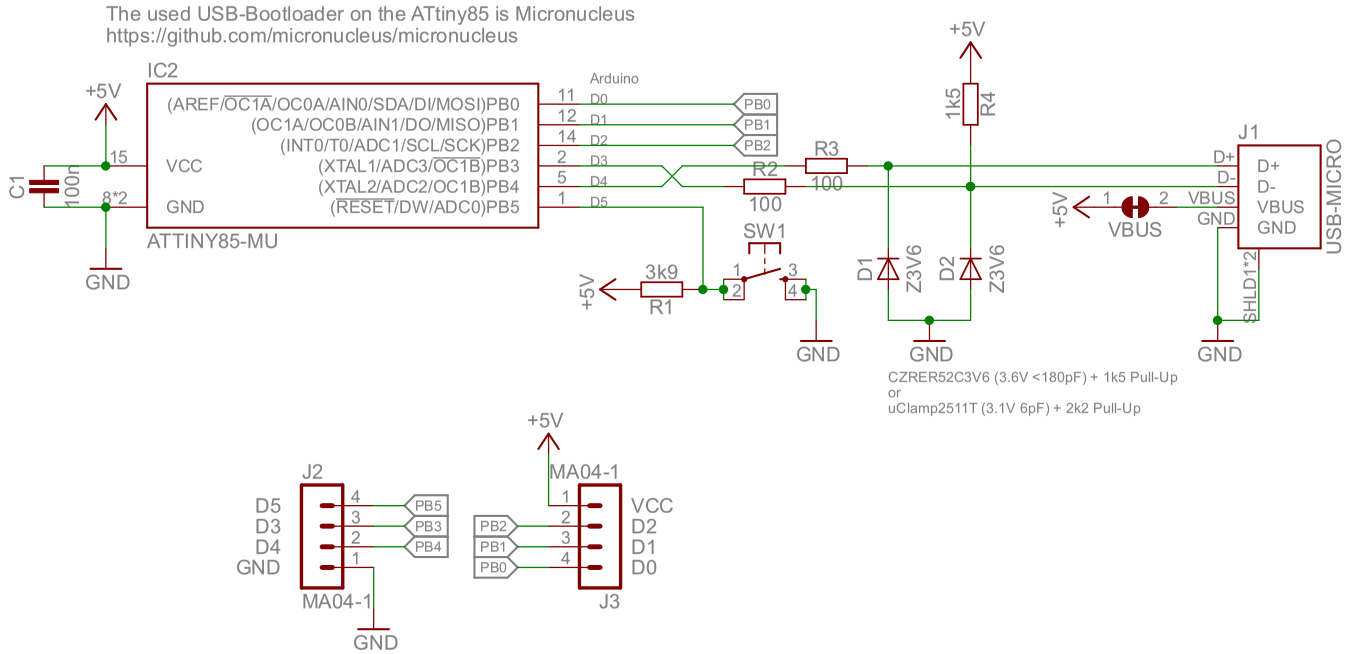

Released under the Creative Commons Attribution Share-Alike License
http://creativecommons.org/licenses/by-sa/4.0/

Designed by Stephan Watterott (Watterott electronic)
Based on the original Nanite 85 design by Tim Böscke
https://github.com/cpldcpu/Nanite

OSHW LOGO | Logo

www.watterott.com

Wattuino-Nanite85_v10

30.05.2015 13:21:55

Sheet: 1/1

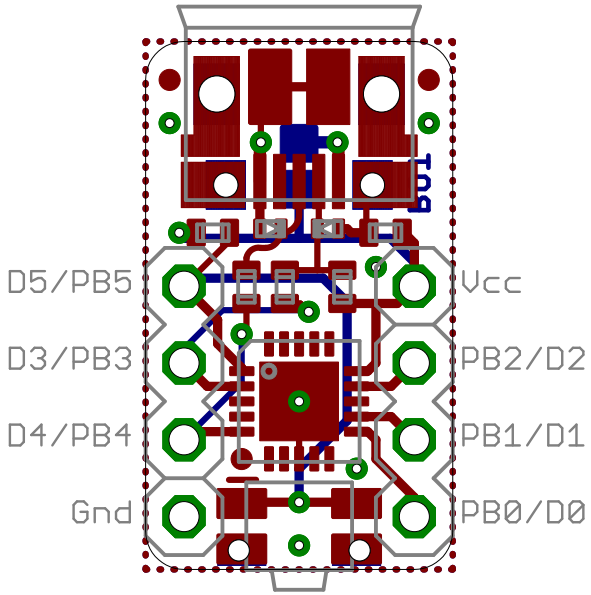
D5/PB5
D3/PB3
D4/PB4
Gnd
Vcc
PB2/D2
PB1/D1
PB0/D0