The used USB-Bootloader on the ATtiny85 is Micronucleus
https://github.com/micronucleus/micronucleus

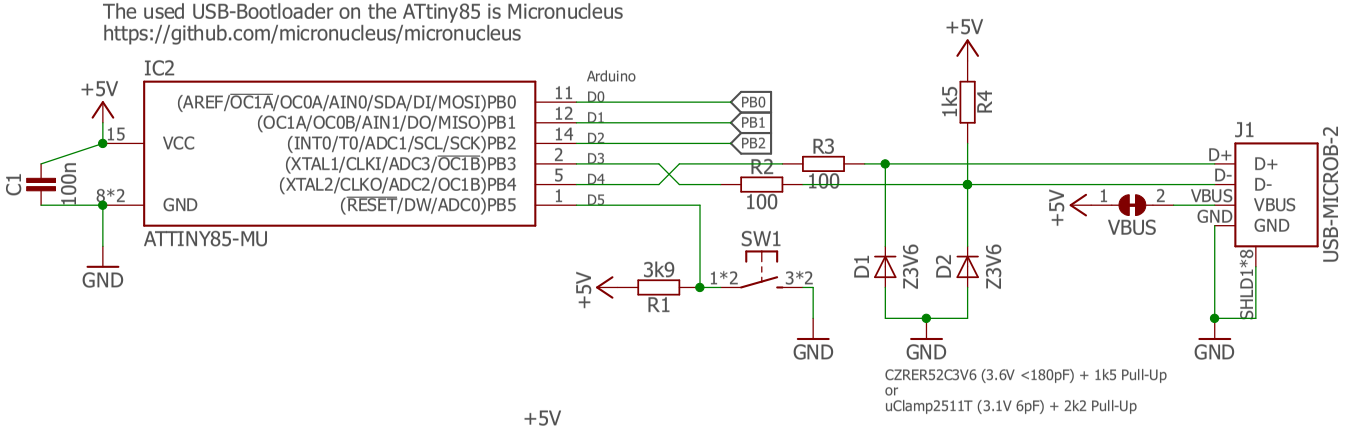

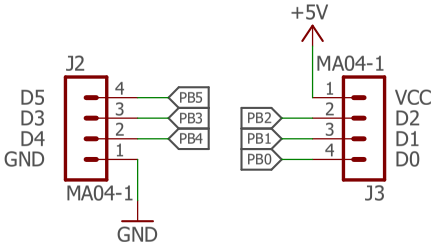

Released under the Creative Commons Attribution Share-Alike License. http://creativecommons.org/licenses/by-sa/4.0/

Designed by Stephan Watterott (Watterott electronic)
Based on the original Nanite 85 design by Tim Böscke
https://github.com/cpldcpu/Nanite

OSHW Watterott

www.watterott.com

Wattuino-Nanite85_v11

10.04.2016 14:32:29

Sheet: 1/1

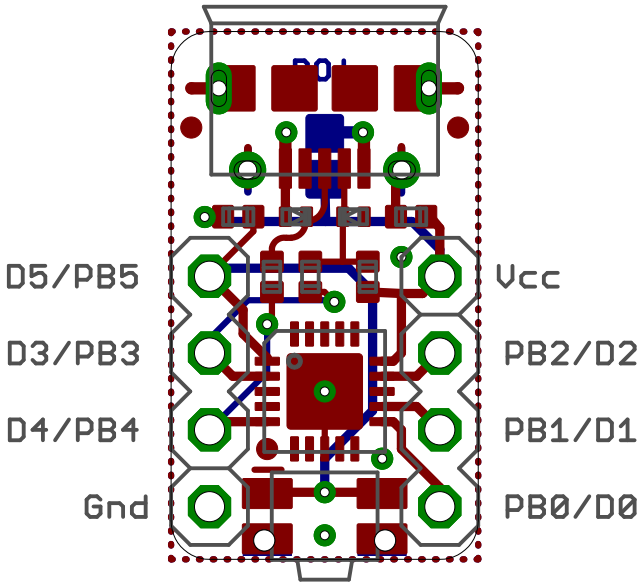
D5/PB5
D3/PB3
D4/PB4
Gnd
Vcc
PB2/D2
PB1/D1
PB0/D0