ATtiny841 AVR

The used USB-Bootloader on the ATtiny841 is Micronucleus
https://github.com/micronucleus/micronucleus

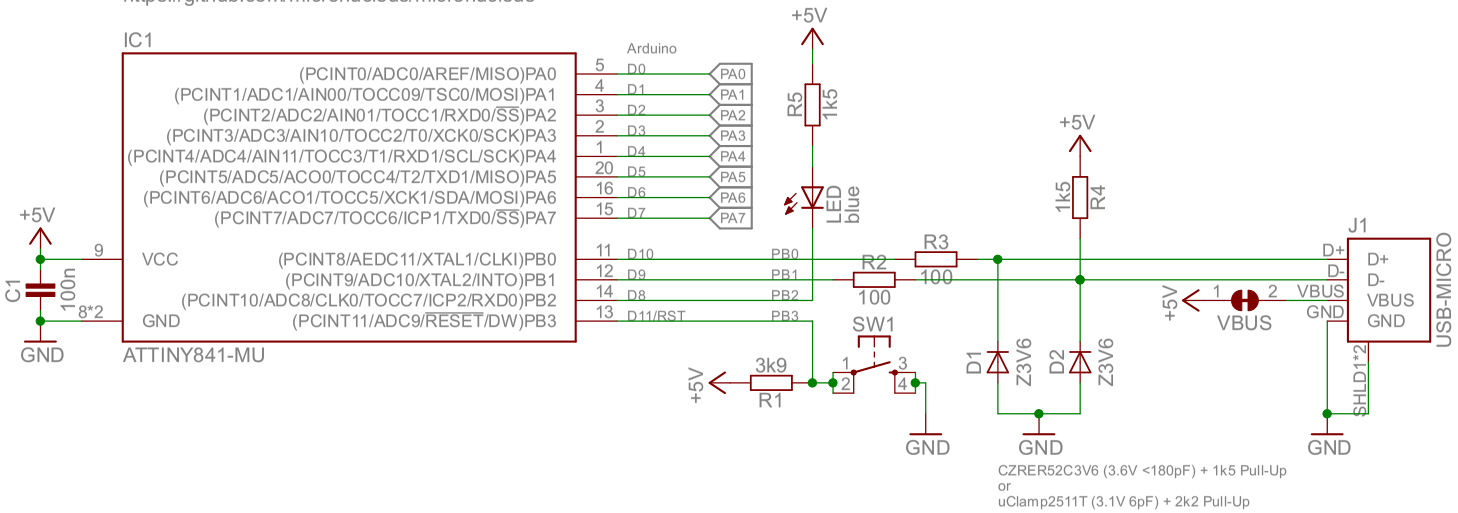

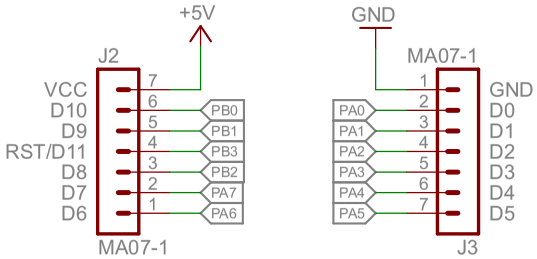

Released under the Creative Commons Attribution Share-Alike License
http://creativecommons.org/licenses/by-sa/4.0/

Designed by Tim Böscke
https://github.com/cpldcpu/Nanite

OSHW LOGO | Logo

www.watterott.com

Wattuino-Nanite841_v10

30.05.2015 13:29:40

Sheet: 1/1

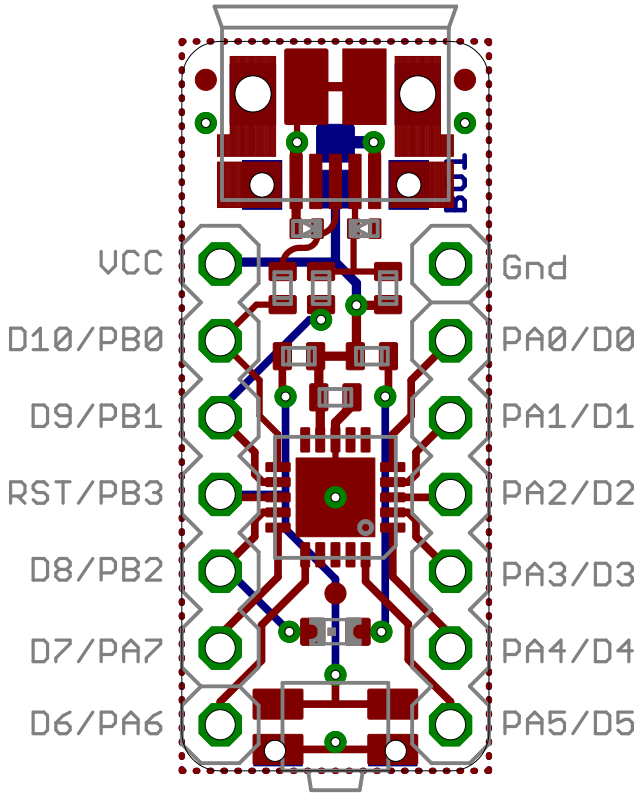
VCC
D10/PB0
D9/PB1
RST/PB3
D8/PB2
D7/PA7
D6/PA6
Gnd
PA0/D0
PA1/D1
PA2/D2
PA3/D3
PA4/D4
PA5/D5