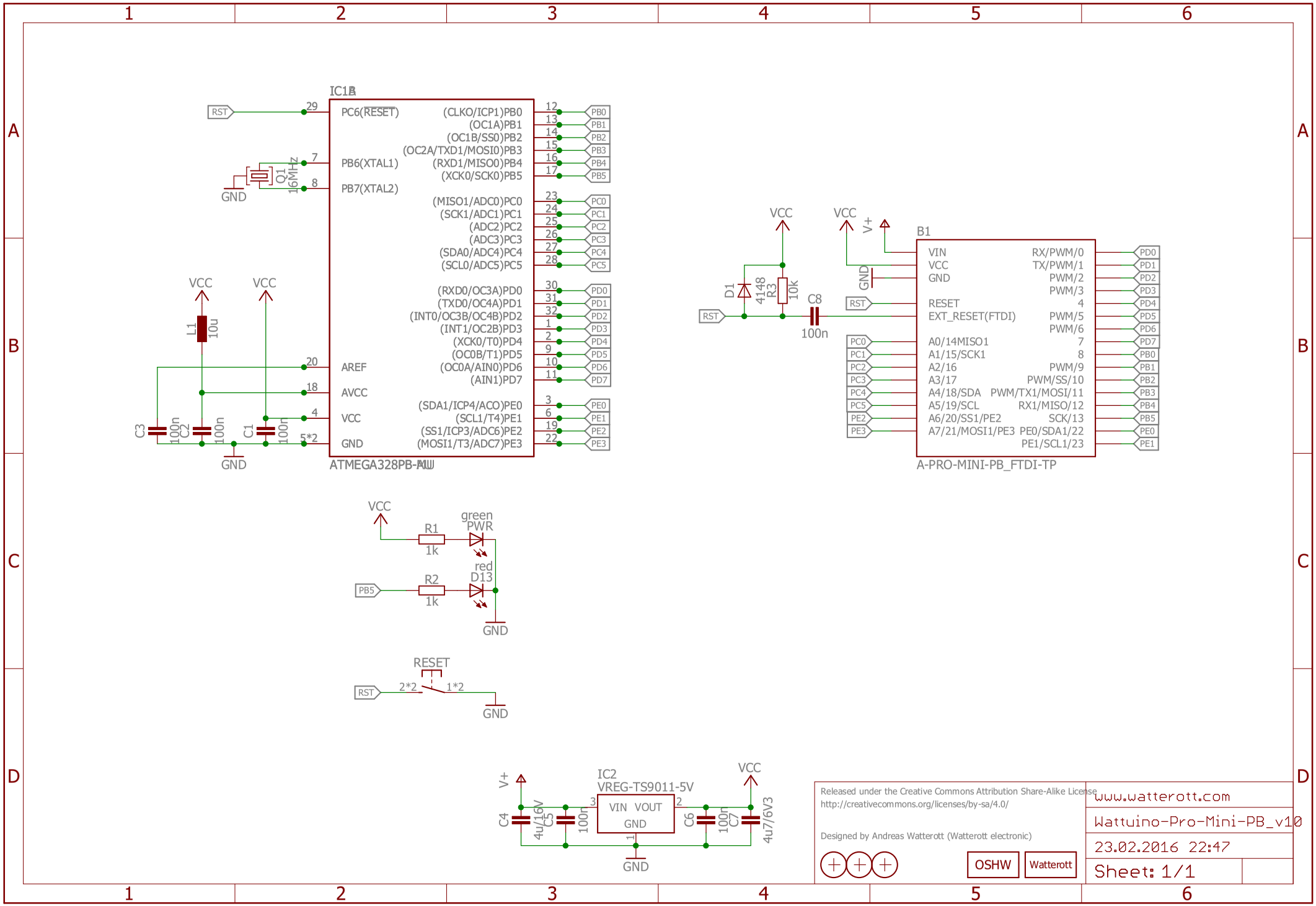
IC1B
ATMEGA328PB-AU
PC6(RESET)
PB6(XTAL1)
PB7(XTAL2)
AREF
AVCC
VCC
GND
(CLKO/ICP1)PB0
(OC1A)PB1
(OC1B/SS0)PB2
(OC2A/TXD1/MOSI0)PB3
(RXD1/MISO0)PB4
(XCK0/SCK0)PB5
(MISO1/ADC0)PC0
(SCK1/ADC1)PC1
(ADC2)PC2
(ADC3)PC3
(SDA0/ADC4)PC4
(SCL0/ADC5)PC5
(RXD0/OC3A)PD0
(TXD0/OC4A)PD1
(INT0/OC3B/OC4B)PD2
(INT1/OC2B)PD3
(XCK0/T0)PD4
(OC0B/T1)PD5
(OC0A/AIN0)PD6
(AIN1)PD7
(SDA1/ICP4/ACO)PE0
(SCL1/T4)PE1
(SS1/ICP3/ADC6)PE2
(MOSI1/T3/ADC7)PE3
Q1 16MHz
L1 10u
C1 100n
C2 100n
C3 100n
B1
A-PRO-MINI-PB_FTDI-TP
VIN
VCC
GND
RESET
EXT_RESET(FTDI)
A0/14MISO1
A1/15/SCK1
A2/16
A3/17
A4/18/SDA
A5/19/SCL
A6/20/SS1/PE2
A7/21/MOSI1/PE3
RX/PWM/0
TX/PWM/1
PWM/2
PWM/3
4
PWM/5
PWM/6
7
8
PWM/9
PWM/SS/10
PWM/TX1/MOSI/11
RX1/MISO/12
SCK/13
PE0/SDA1/22
PE1/SCL1/23
V+
D1 4148
R3 10k
C8 100n
R1 1k
R2 1k
green PWR
red D13
RESET
2*2
1*2
IC2
VREG-TS9011-5V
VIN VOUT
C4 4u/16V
C5 100n
C6 100n
C7 4u7/6V3
Released under the Creative Commons Attribution Share-Alike License
http://creativecommons.org/licenses/by-sa/4.0/
Designed by Andreas Watterott (Watterott electronic)
OSHW
Watterott
www.watterott.com
Wattuino-Pro-Mini-PB_v10
23.02.2016 22:47
Sheet: 1/1

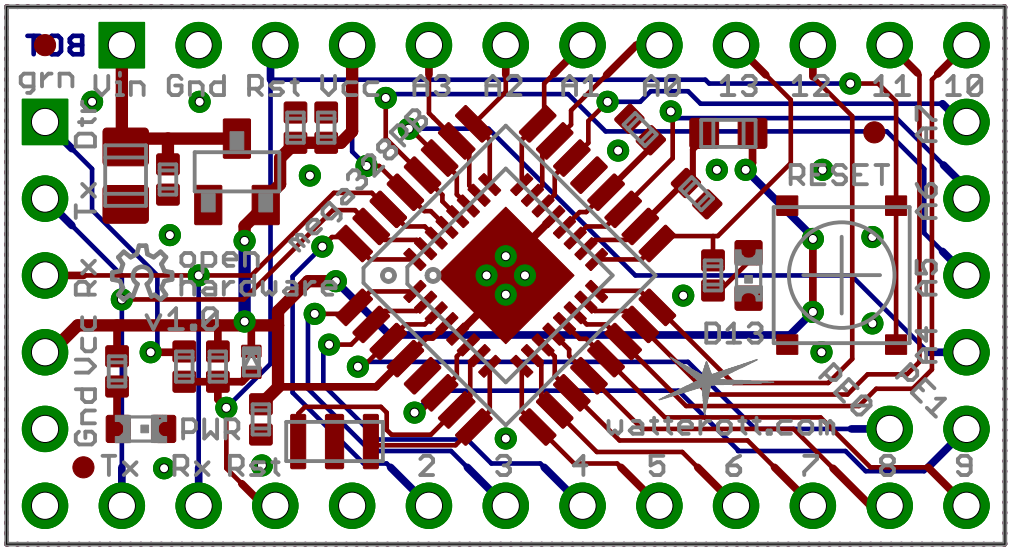
TOP
BOT
grn
Vin
Gnd
Rst
Vcc
A3
A2
A1
A0
13
12
11
10
Dtr
Tx
Rx
Gnd
Vcc
open
hardware
V1.0
PWR
Tx
Rx
Rst
2
3
4
5
6
7
8
9
RESET
D13
watterott.com

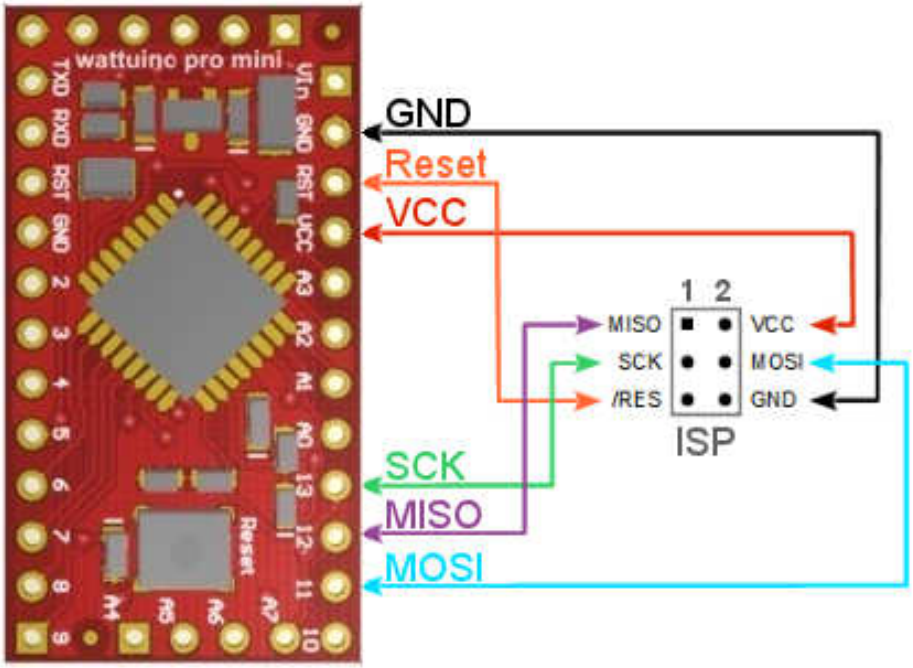
wattuino pro mini
GND
Reset
VCC
1 2
MISO
SCK
/RES
VCC
MOSI
GND
ISP
SCK
MISO
MOSI