bobuino1

bobuino1.sch

modules

bobuino2.sch

Sheet: /
File: bobuino.sch

Title:

Size: A4	Date:	**Rev:**
KiCad E.D.A. kicad 4.0.0-rc1-stable		Id: 1/3

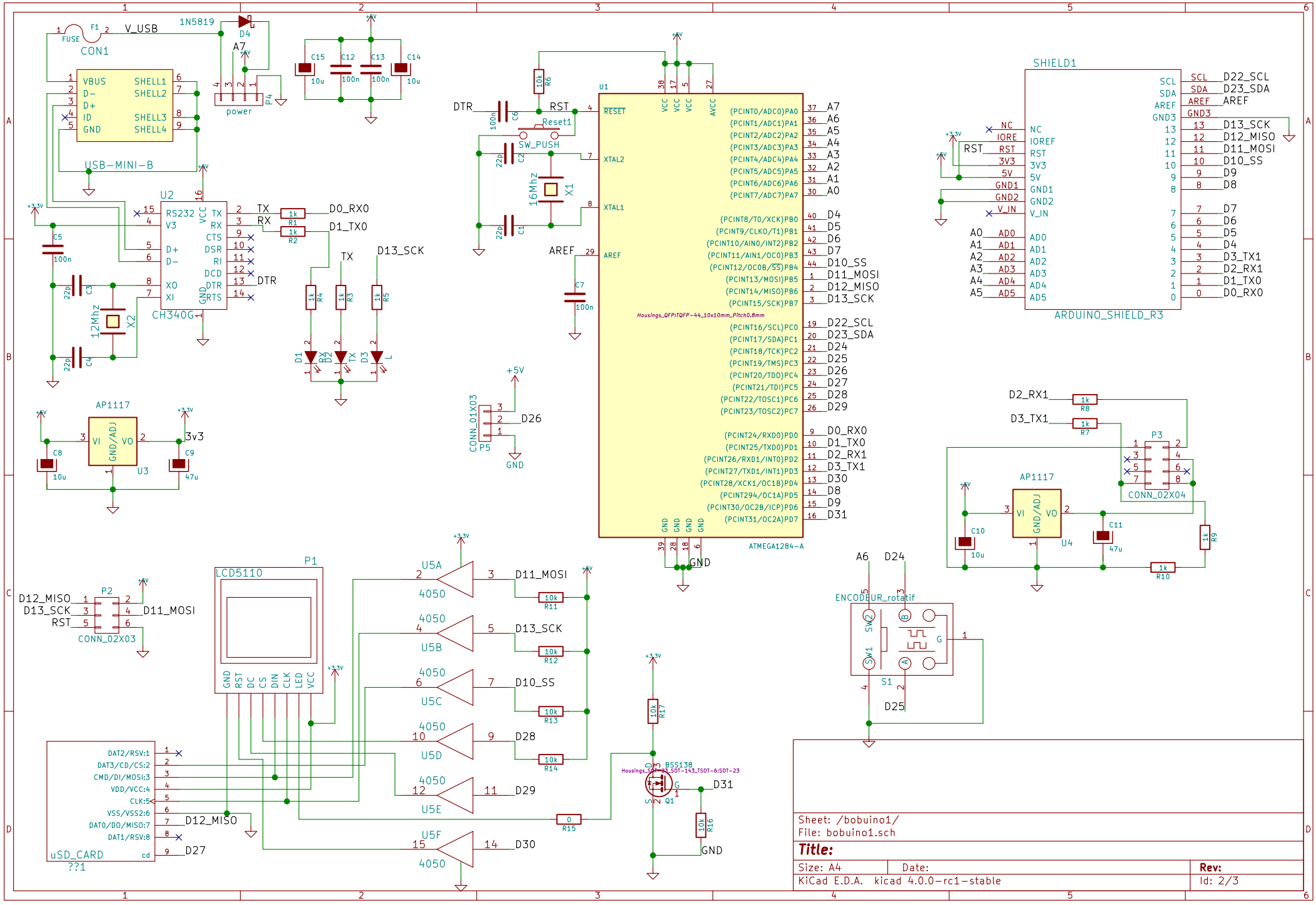
CON1
FUSE
F1
V_USB
1N5819
D4
A7
power
P4
USB-MINI-B
VBUS
D-
D+
ID
GND
SHELL1
SHELL2
SHELL3
SHELL4
U2
CH340G
RS232
V3
VCC
TX
RX
CTS
DSR
RI
DCD
DTR
RTS
D+
D-
XO
XI
GND
12Mhz
X2
C5
C3
C4
22p
100n
D0_RX0
D1_TX0
DTR
TX
D13_SCK
R1
R2
R4
R3
R5
D1
D2
D3
RX
L
AP1117
VI
VO
GND/ADJ
U3
C8
C9
10u
47u
3v3
C15
C12
C13
C14
U1
ATMEGA1284-A
RESET
XTAL2
XTAL1
AREF
AVCC
Reset1
SW_PUSH
16Mhz
X1
C1
C2
C6
C7
R6
10k
RST
(PCINT0/ADC0)PA0
(PCINT1/ADC1)PA1
(PCINT2/ADC2)PA2
(PCINT3/ADC3)PA3
(PCINT4/ADC4)PA4
(PCINT5/ADC5)PA5
(PCINT6/ADC6)PA6
(PCINT7/ADC7)PA7
(PCINT8/T0/XCK)PB0
(PCINT9/CLKO/T1)PB1
(PCINT10/AIN0/INT2)PB2
(PCINT11/AIN1/OC0)PB3
(PCINT12/OC0B/SS)PB4
(PCINT13/MOSI)PB5
(PCINT14/MISO)PB6
(PCINT15/SCK)PB7
(PCINT16/SCL)PC0
(PCINT17/SDA)PC1
(PCINT18/TCK)PC2
(PCINT19/TMS)PC3
(PCINT20/TDO)PC4
(PCINT21/TDI)PC5
(PCINT22/TOSC1)PC6
(PCINT23/TOSC2)PC7
(PCINT24/RXD0)PD0
(PCINT25/TXD0)PD1
(PCINT26/RXD1/INT0)PD2
(PCINT27/TXD1/INT1)PD3
(PCINT28/XCK1/OC1B)PD4
(PCINT294/OC1A)PD5
(PCINT30/OC2B/ICP)PD6
(PCINT31/OC2A)PD7
A7
A6
A5
A4
A3
A2
A1
A0
D4
D5
D6
D7
D10_SS
D11_MOSI
D12_MISO
D13_SCK
D22_SCL
D23_SDA
D24
D25
D26
D27
D28
D29
D30
D31
D0_RX0
D1_TX0
D2_RX1
D3_TX1
D8
D9
GND
CONN_01X03
P5
SHIELD1
ARDUINO_SHIELD_R3
SCL
SDA
AREF
GND3
NC
IORE
IOREF
RST
3V3
5V
GND1
GND2
V_IN
AD0
AD1
AD2
AD3
AD4
AD5
D13_SCK
D12_MISO
D11_MOSI
D10_SS
D9
D8
D7
D6
D5
D4
D3_TX1
D2_RX1
D1_TX0
D0_RX0
P3
CONN_02X04
R8
R7
R9
R10
C10
C11
U4
P2
CONN_02X03
D12_MISO
D13_SCK
RST
D11_MOSI
P1
LCD5110
GND
RST
DC
CS
DIN
CLK
LED
VCC
U5A
U5B
U5C
U5D
U5E
U5F
4050
R11
R12
R13
R14
R15
R17
R16
BSS138
Q1
D31
D28
D29
D30
D27
uSD_CARD
??1
DAT2/RSV:1
DAT3/CD/CS:2
CMD/DI/MOSI:3
VDD/VCC:4
CLK:5
VSS/VSS2:6
DAT0/DO/MISO:7
DAT1/RSV:8
cd
ENCODEUR_rotatif
SW1
SW2
S1
A6
D24
D25
Sheet: /bobuino1/
File: bobuino1.sch
Title:
Size: A4
Date:
Rev:
KiCad E.D.A. kicad 4.0.0-rc1-stable
Id: 2/3

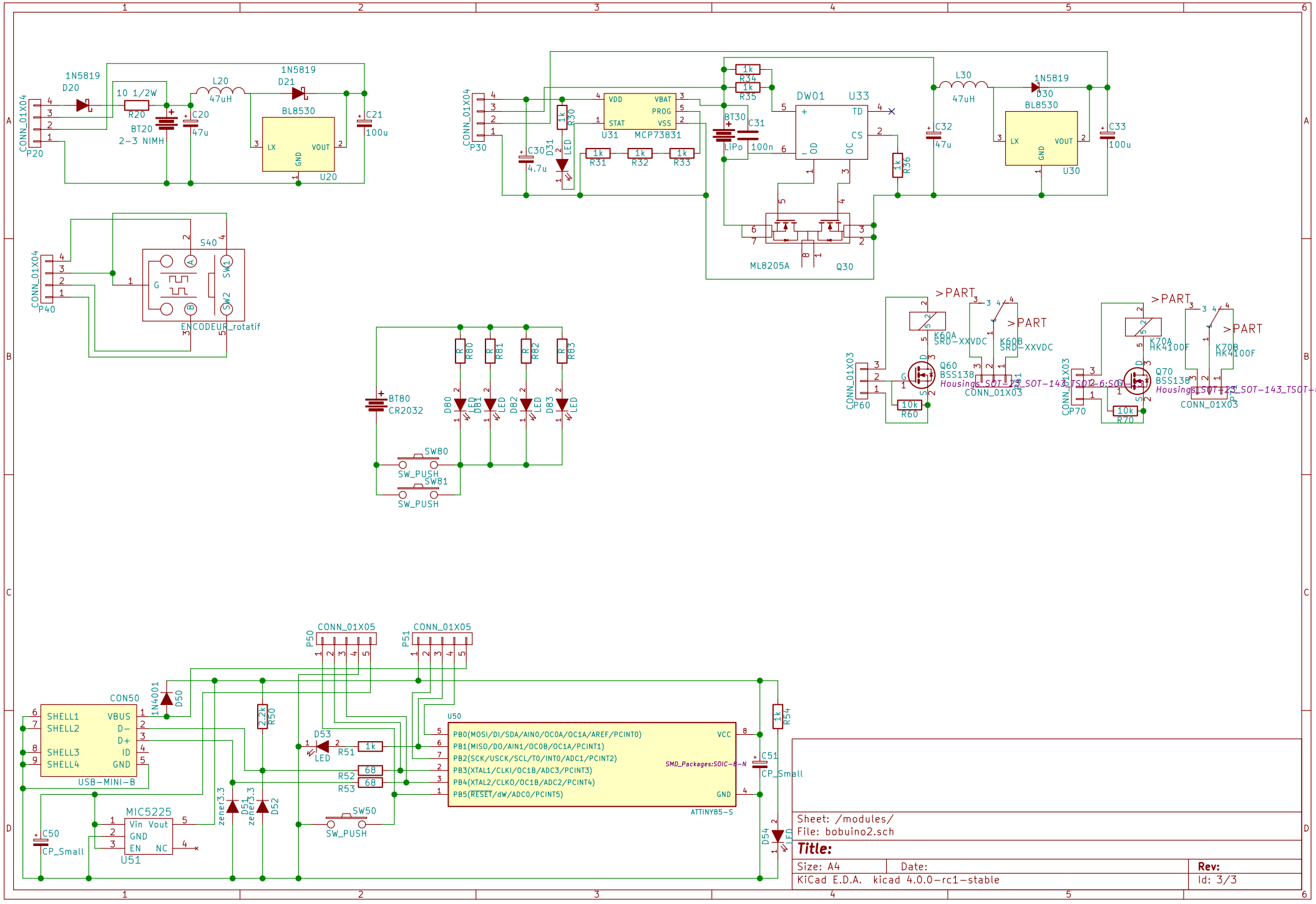

Sheet: /modules/
File: bobuino2.sch

Title:

Size: A4	Date:	Rev:
KiCad E.D.A. kicad 4.0.0-rc1-stable		Id: 3/3