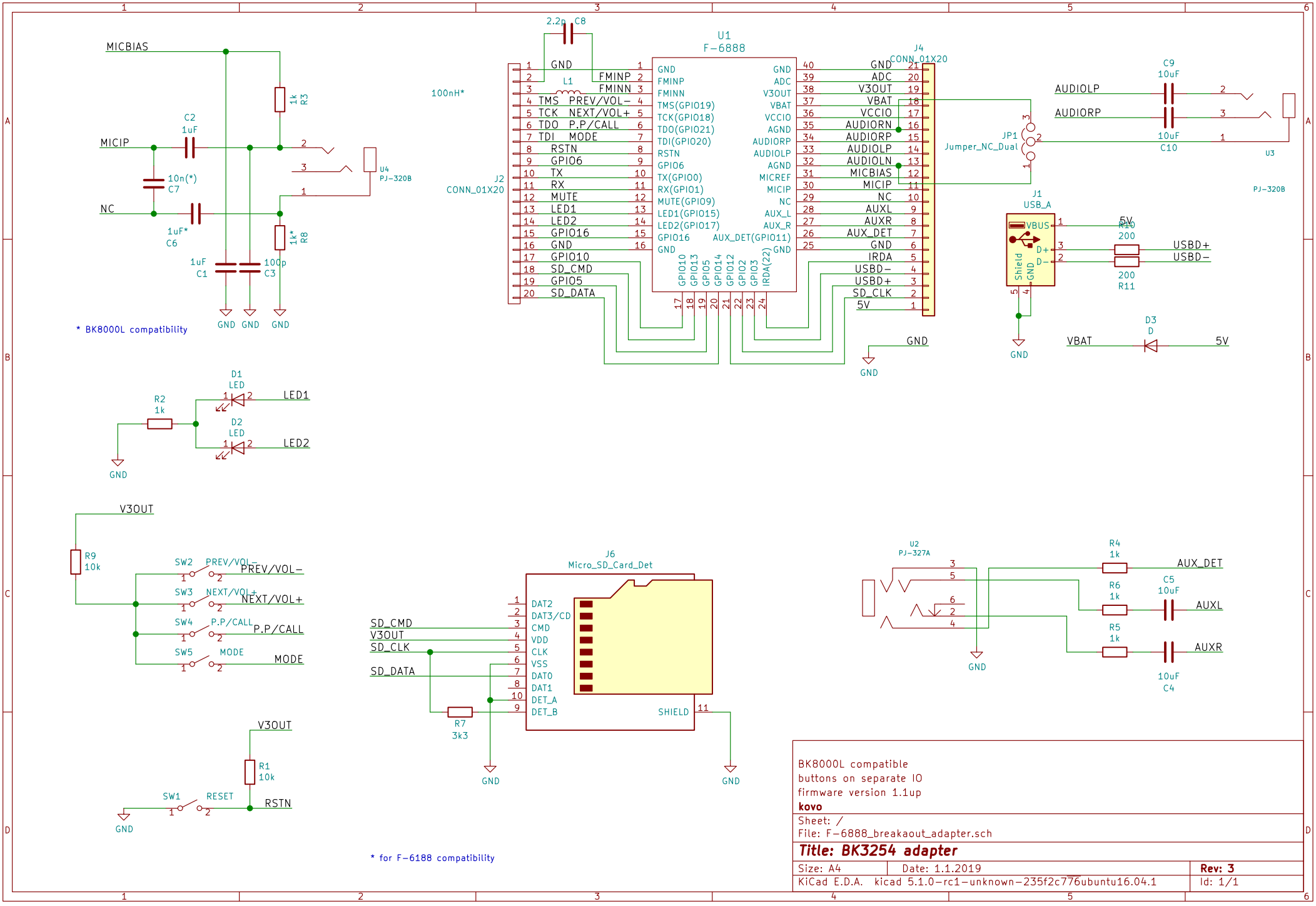
MICBIAS
MICIP
NC
C2 1uF
10n(*) C7
1uF* C6
1k R3
1k* R8
1uF C1
100p C3
U4 PJ-320B
GND GND GND
* BK8000L compatibility
2.2n C8
L1 100nH*
U1 F-6888
J2 CONN_01X20
J4 CONN_01X20
GND FMINP FMINN TMS PREV/VOL- TCK NEXT/VOL+ TDO P.P/CALL TDI MODE RSTN GPIO6 TX RX MUTE LED1 LED2 GPIO16 GND GPIO10 SD_CMD GPIO5 SD_DATA
GND ADC V3OUT VBAT VCCIO AUDIORN AUDIORP AUDIOLP AUDIOLN MICBIAS MICIP NC AUXL AUXR AUX_DET GND IRDA USBD- USBD+ SD_CLK 5V
GND GND
JP1 Jumper_NC_Dual
AUDIOLP AUDIORP
C9 10uF
C10 10uF
U3 PJ-320B
J1 USB_A
VBUS D+ D- Shield GND
5V
R10 200
R11 200
USBD+ USBD-
GND
D3 D
VBAT 5V
D1 LED
D2 LED
R2 1k
LED1 LED2
GND
V3OUT
R9 10k
SW2 PREV/VOL- PREV/VOL-
SW3 NEXT/VOL+ NEXT/VOL+
SW4 P.P/CALL P.P/CALL
SW5 MODE MODE
J6 Micro_SD_Card_Det
DAT2 DAT3/CD CMD VDD CLK VSS DAT0 DAT1 DET_A DET_B SHIELD
SD_CMD V3OUT SD_CLK SD_DATA
R7 3k3
GND GND
U2 PJ-327A
R4 1k R6 1k R5 1k
C5 10uF C4 10uF
AUX_DET AUXL AUXR
GND
V3OUT
R1 10k
SW1 RESET
RSTN
GND
* for F-6188 compatibility
BK8000L compatible
buttons on separate IO
firmware version 1.1up
kovo
Sheet: /
File: F-6888_breakaout_adapter.sch
Title: BK3254 adapter
Size: A4
Date: 1.1.2019
Rev: 3
KiCad E.D.A. kicad 5.1.0-rc1-unknown-235f2c776ubuntu16.04.1
Id: 1/1