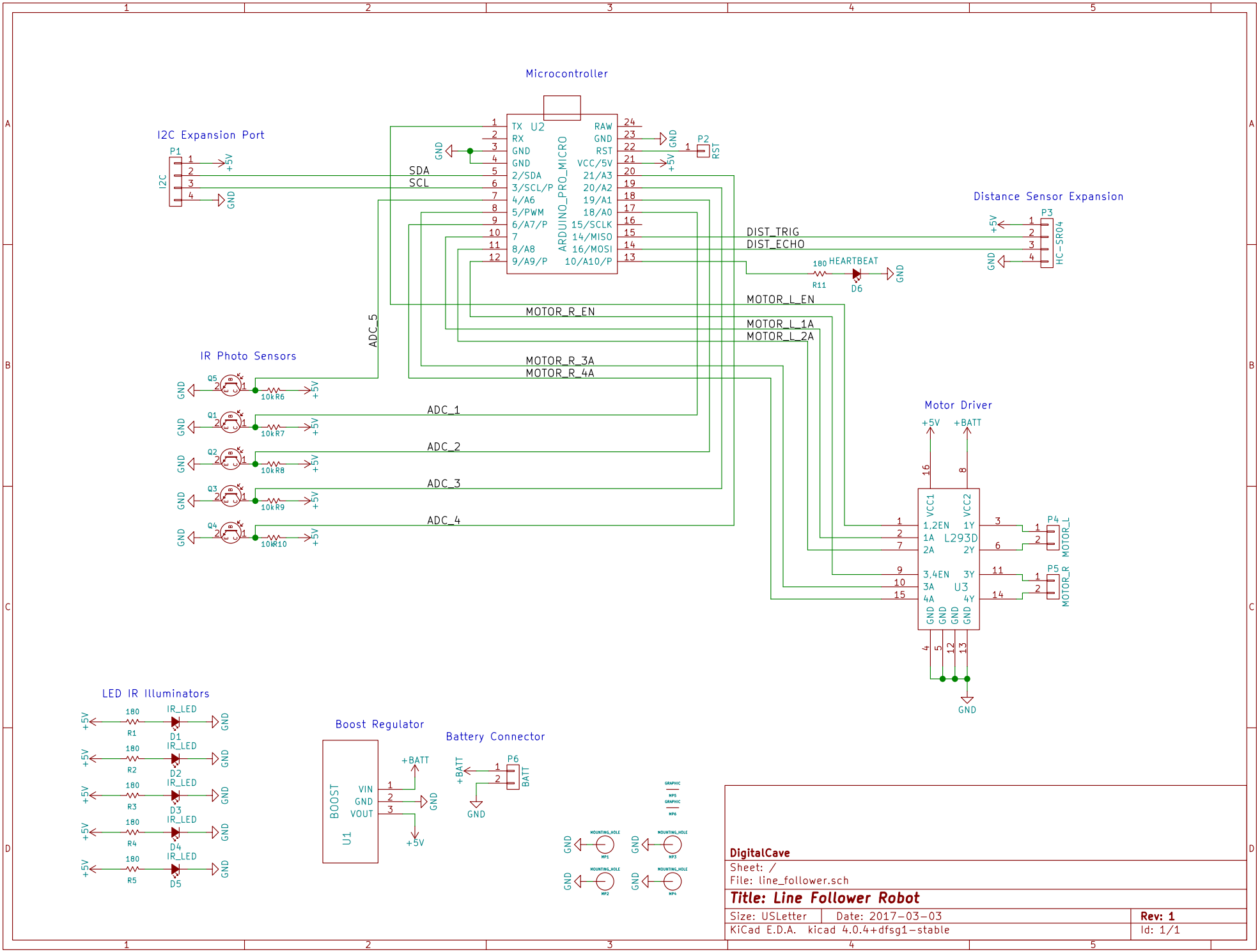
Microcontroller
U2
ARDUINO_PRO_MICRO
TX
RX
GND
GND
2/SDA
3/SCL/P
4/A6
5/PWM
6/A7/P
7
8/A8
9/A9/P
RAW
GND
RST
VCC/5V
21/A3
20/A2
19/A1
18/A0
15/SCLK
14/MISO
16/MOSI
10/A10/P
P2
RST
I2C Expansion Port
P1
I2C
+5V
GND
SDA
SCL
Distance Sensor Expansion
P3
HC-SR04
DIST_TRIG
DIST_ECHO
180
R11
HEARTBEAT
D6
MOTOR_L_EN
MOTOR_R_EN
MOTOR_L_1A
MOTOR_L_2A
MOTOR_R_3A
MOTOR_R_4A
ADC_5
IR Photo Sensors
Q5
Q1
Q2
Q3
Q4
10k
R6
R7
R8
R9
R10
ADC_1
ADC_2
ADC_3
ADC_4
Motor Driver
+5V
+BATT
VCC1
VCC2
1,2EN
1A
2A
3,4EN
3A
4A
1Y
2Y
3Y
4Y
L293D
U3
P4
MOTOR_L
P5
MOTOR_R
LED IR Illuminators
180
R1
R2
R3
R4
R5
IR_LED
D1
D2
D3
D4
D5
Boost Regulator
BOOST
U1
VIN
GND
VOUT
+BATT
+5V
Battery Connector
P6
BATT
MOUNTING_HOLE
MP1
MP2
MP3
MP4
MP5
MP6
GRAPHIC
DigitalCave
Sheet: /
File: line_follower.sch
Title: Line Follower Robot
Size: USLetter
Date: 2017-03-03
Rev: 1
KiCad E.D.A. kicad 4.0.4+dfsg1-stable
Id: 1/1