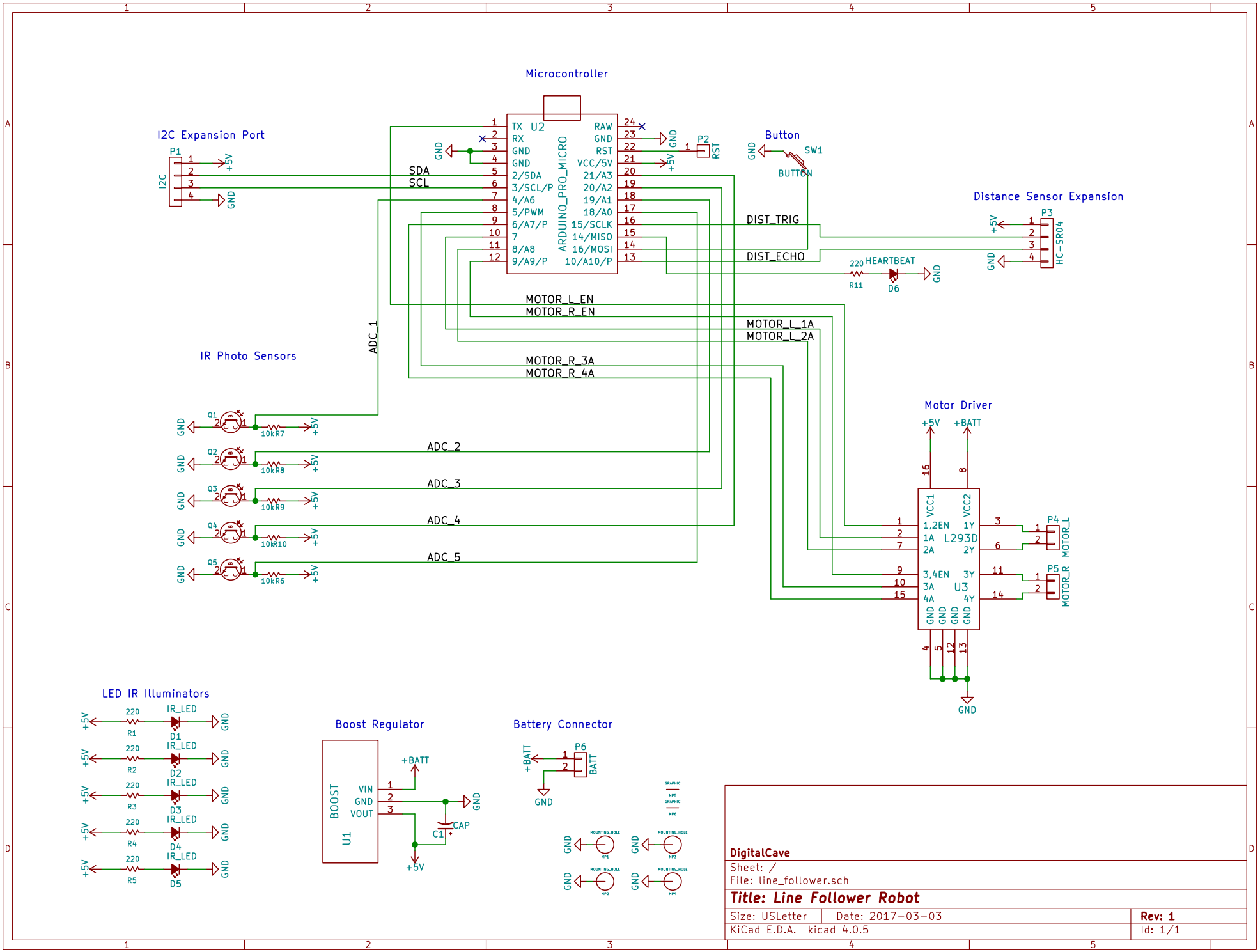

DigitalCave

Sheet: /

File: line_follower.sch

Title: Line Follower Robot

Size: USLetter	Date: 2017-03-03	**Rev: 1**
KiCad E.D.A. kicad 4.0.5		Id: 1/1